Temperature displays

LED temperature displays | For thermocouple inputs J, K and N (DC) | Codix 532



Cost-effective temperature display for front panel mount with bright 5-digit LED display for values in °C or °F.

For very accurate temperature measurements using J, K or N thermocouples with permanently stored characteristic curves and selectable cold junction compensation.

Minimum and maximum value detection for temperature monitoring over long periods of time.



Product features

- Input ranges: J, K, N thermocouples with external or internal cold junction compensation.
- Compact and cost-effective temperature display.
- Easy programming and operation.
- Modern industrial design.
- 5 measurements / second.

Benefits

- Temperature display in °C or °F.
- MIN/MAX value acquisition and data backup in case of power off.
- Galvanic isolation with protection against incorrect polarity.
- Screw terminal connection: pitch 5 mm.
- Display hold input.

Order no.

Temperature display for J, K and N thermocouplers	**6.532.012.300** 1)

Delivery specification

- Digital display
- Mounting clip
- Gasket
- Front bezel for screw mounting (T008181) 56 x 40 mm [2.20 x 1.57"], panel cut-out 50 x 25 mm [1.97 x 0.98"]
- Front bezel for clip mounting (T008180) 53 x 28 mm [2.09 x 1.10"], panel cut-out 50 x 25 mm [1.97 x 0.98"]
- 1 set of self-adhesive symbols
- Instruction manual, multilingual

1) Stock types

© Fritz Kübler GmbH, subject to errors and changes. 03/2023

LED temperature displays | For thermocouple inputs J, K and N (DC) | Codix 532

Accessories / Mounting examples

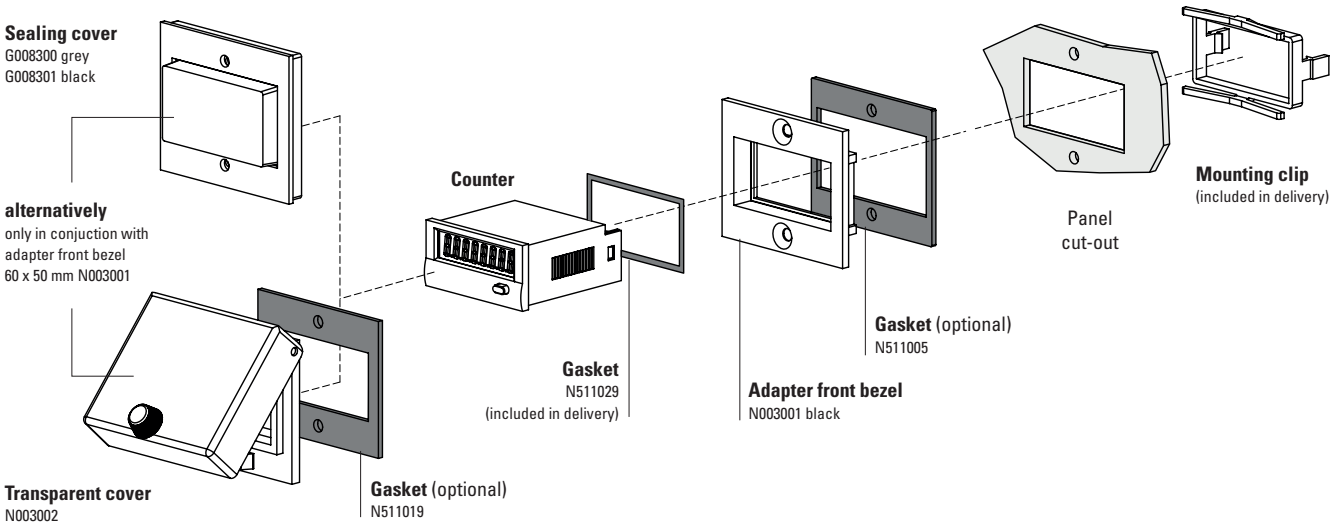

		Type / size	Description		Order no.	suitable gasket
Adapter front bezel		**53 x 28 mm [2.09 x 1.10“]**	for cut-out 50 x 25 mm [1.97 x 0.98“] to cut-out 45 x 22.2 mm [1.77 x 0.94“]	grey black anthracite	**T008164** **T008165** **T008180**	**N511015**
		**56 x 40 mm [2.20 x 1.57“]**	for cut-out 50 x 25 mm [1.97 x 0.98“] to cut-out 45 x 22.2 mm [1.77 x 0.94“] screw mounting	black anthracite	**T008161** **T008181**	**N511045**
		**72 x 36 mm [2.83 x 1.42“]**	for cut-out 68 x 33 mm [2.68 x 1.30“] to cut-out 45 x 22.2 mm [1.77 x 0.94“]	black and silver anodised as set	**162704Set**	–
		**60 x 50 mm [2.36 x 1.97“]**	for cut-out 54 x 29 mm [2.13 x 1.14“] to cut-out 45 x 22.2 mm [1.77 x 0.94“] screw mounting	black	**N003001**	**N511005**
		**48 x 48 mm [1.89 x 1.89“]**	for cut-out 45 x 45 mm [1.77 x 1.77“] to cut-out 45 x 22.2 mm [1.77 x 0.94“]	black	**T008883**	–
Sealing cover IP65		**K1**	only in conjuction with adapter front bezel 60 x 50 mm N003001	transparent / grey transparent / black	**G008300** **G008301**	–
Transparent cover IP65		**1 Dv** (mounted on bezel)	cover lockable, for cut-out 54 x 29 mm [2.13 x 1.14“], only in conjuction with adapter front bezel 60 x 50 mm N003001	transparent / black	**N003002**	**N511019**
Gasket counter			48 x 24 mm (for installation in adapter front bezel) 49 x 25 mm		**N511029** **N511034**	
Mounting frame		**cut-out 50 x 25 mm [1.97 x 0.98“]**	via adapter T008180 for snap-on mounting on 35 mm [1.38“] top-hat DIN rail	chromated	**G300004**	–
Enclosure blind		**48 x 24 mm [1.89 x 0.94“]**	for cut-out 45 x 22.2 mm [1.77 x 0.94“] and cut-out 50 x 25 mm [1.97 x 0.98“]	anthracite	**G003836**	–

incl. in delivery

© Fritz Kübler GmbH, subject to errors and changes. 03/2023

LED temperature displays | For thermocouple inputs J, K and N (DC) | Codix 532

Technical data

General technical data

Display	5 digits, red 7 segment LED display; 8 mm [0.32"] high
Display refresh	1 ... 2 times per second
Data backup	EEPROM
Operating temperature	-20 °C ... +65 °C [-4 °F ... +149 °F] (non-condensing)

Electrical characteristics

Supply voltage	10 ... 30 V DC, galvanically isolated with integrated reverse polarity protection
Current consumption	max. 40 mA

Mechanical characteristics

Housing	front panel mount 48 x 24 mm [1.89 x 0.94"] acc. to DIN 43700; RAL 7021, dark grey
Protection	IP65 (front side)
Weight	approx. 50 g [1.76 oz]
Connections	screw terminal, pitch 5.08 mm [2"] , 7 pin

Measuring signal inputs

Measuring rate		5 measurements / second
Input		thermocouple sensor J (Fe-CuNi) K (Ni-CrNi) N (NiCrSi-NiSi) with sensor breakage monitoring
Temperature ranges (according to DIN IEC 584)	J (Fe-CuNi)	-210.0 °C ... +1200.0 °C [-346.0 °F ... +2192.0 °F]
	K (Ni-CrNi)	-200.0 °C ... +1372.0 °C [-328.0 °F ... +2501.6 °F]
	N (NiCrSi-NiSi)	-200.0 °C ... +1300.0 °C [-328.0 °F ... +2370.0 °F6
Resolution		0.1 °C (0.1 °F) or 1 °C (1 °F)
Linearity error		< 0.4 % for the whole measuring range at an operating temperature of 20 °C [68 °F]
Temperature drift		0.1 $K/K_{Ambient}$
Cold junction error		±1 °C typ. / ±3 °C max.
Control inputs	HIGH LOW	4 ... 30 V DC 0 ... 2 V DC

Approvals

UL compliant in accordance with		File no. E128604
CE compliant in accordance with		
	EMC Directive	2014/30/EU
	RoHS Directive	2011/65/EU
UKCA compliant in accordance with		
	EMC Regulations	S.I. 2016/1091
	RoHS Regulations	S.I. 2012/3032

Terminal assignment

1	2	3	4	5	6	7
10 ... 30 V DC	0 V DC GND	Latch input	n.c.	Thermocouple +	n.c.	Thermocouple –

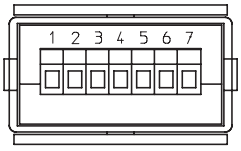

Connection supply voltage and latch input

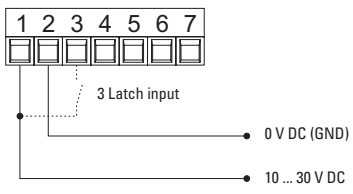

Connection thermocouple sensor

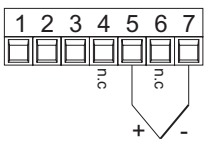

© Fritz Kübler GmbH, subject to errors and changes. 03/2023

LED temperature displays | For thermocouple inputs J, K and N (DC) | Codix 532

Dimensions

Dimensions in mm [inch]

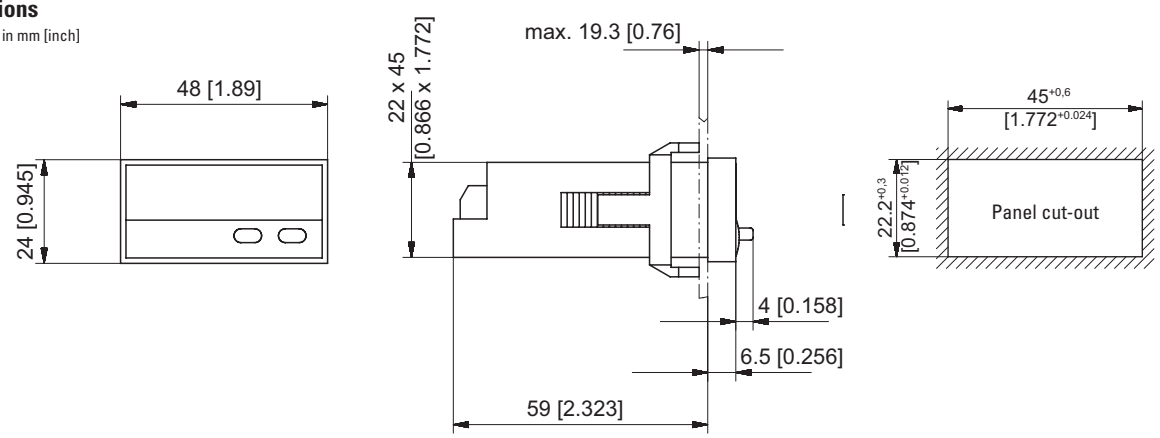

Front bezel

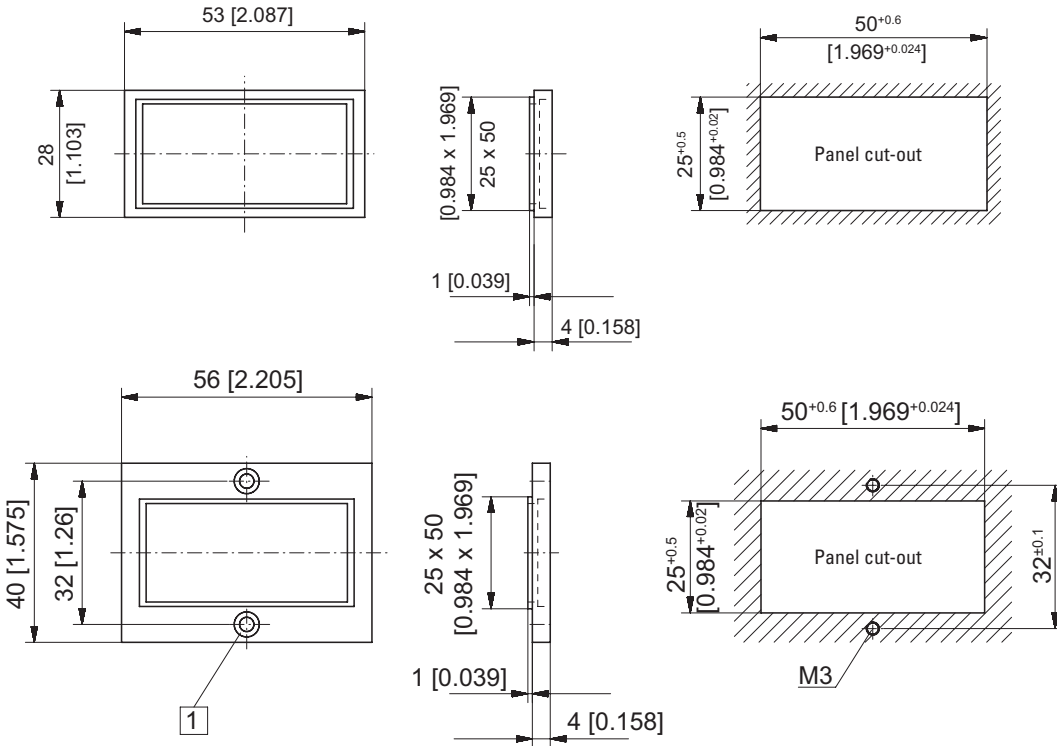

1 Countersinking Af3, DIN 74

© Fritz Kübler GmbH, subject to errors and changes. 03/2023