Powering Business Worldwide

**11/15 IL01206006Z**
(AWA1230-1916, AWA1230-2538)

**Instruction Leaflet**
**Montageanweisung**
**Notice d'installation**
**Instrucciones de montaje**
**Istruzioni per il montaggio**
**安装说明**
**Инструкция по монтажу**

**NZMB(C)(N)(S)(H)(L)2(-4)-A(M)(S)…**
**NZMN(H)(L)2(-4)-VE(ME)…**
**(P)N2(-4)-…**

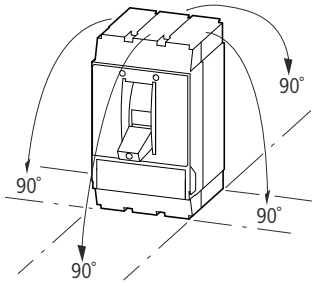


**NZMB(N)(H)(L)2-A(AF)…(-BT)-NA**
**NZMB(N)(H)(L)2-S…(-BT)-CNA**
**NZMN(H)(L)2-VE…(-BT)-NA**
**NZMN(H)(L)2-VEF…(-BT)-NA**
**NZMN(H)(L)2-SE…(-BT)-CNA**
**NZMN(H)2-ME...(-BT)-NA**
**N(S)2-…(-BT)-NA**

**(en) Electric current! Danger to life!**
Only skilled or instructed persons may carry out the following operations.

**(de) Lebensgefahr durch elektrischen Strom!**
Nur Elektrofachkräfte und elektrotechnisch unterwiesene Personen dürfen die im Folgenden beschriebenen Arbeiten ausführen.

**(fr) Tension électrique dangereuse !**
Seules les personnes qualifiées et averties doivent exécuter les travaux ci-après.

**(es) ¡Corriente eléctrica! ¡Peligro de muerte!**
El trabajo a continuación descrito debe ser realizado por personas cualificadas y advertidas.

**(it) Tensione elettrica: Pericolo di morte!**
Solo persone abilitate e qualificate possono eseguire le operazioni di seguito riportate.

**(zh) 触电危险！**
只允许专业人员和受过专业训练的人员进行下列工作。

**(ru) Электрический ток! Опасно для жизни!**
Только специалисты или проинструктированные лица могут выполнять следующие операции.

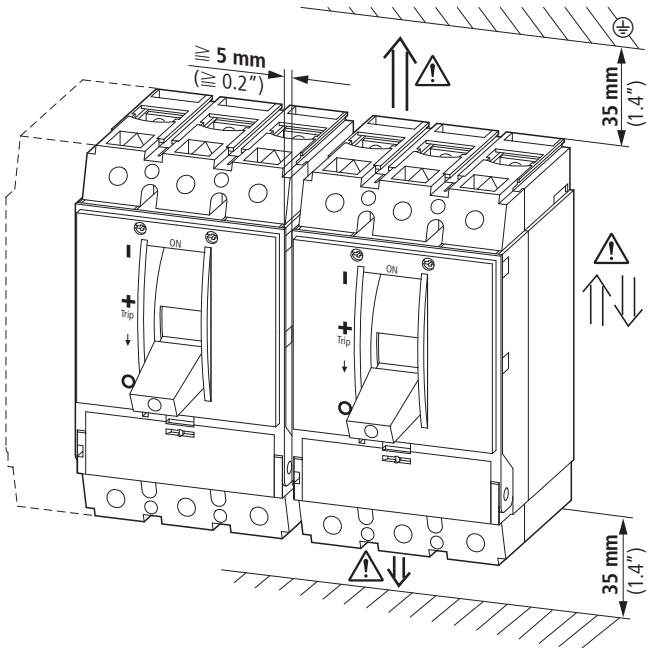


Minimum Clearance space for all models

Blowout direction in case of a short-circuit

Ausblasrichtung im Kurzschlussfall

Dégagement gazeux en cas de court-circuit

Dirección de salida de los gases en caso de cortocircuito

Direzione di estinzione in caso di corto circuito

短路时的排空方向

Направление продувки в случае короткого замыкания

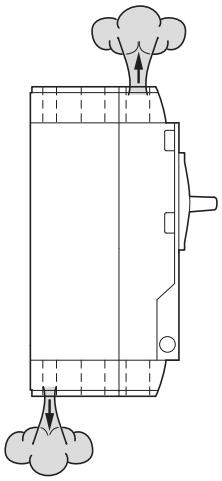

**NZMB(C)2-A…  ≦ 250 A**
**(P)N2(-4)-…**

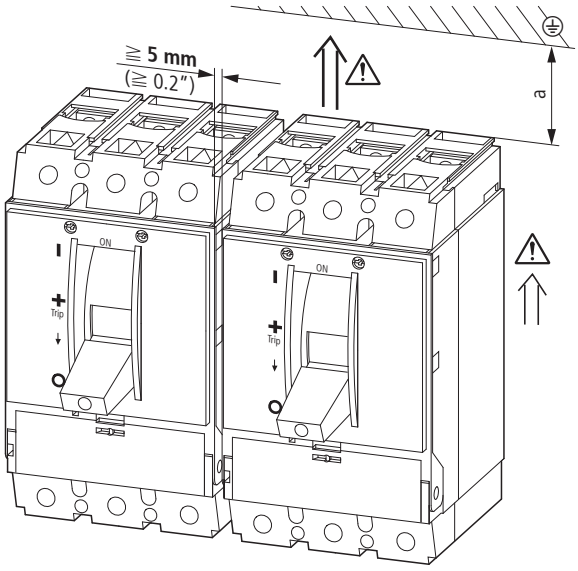


| | a | |
|---|---|---|
| | mm | inch |
| NZMB(C)2-A… | 60 | 2.4 |
| (P)N2(-4)-… | 35 | 1.4 |

Blowout direction in case of a short-circuit

Ausblasrichtung im Kurzschlussfall

Dégagement gazeux en cas de court-circuit

Dirección de salida de los gases en caso de cortocircuito

Direzione di estinzione in caso di corto circuito

短路时的排空方向

Направление продувки в случае короткого замыкания

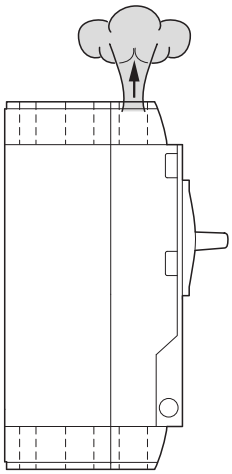

## -NA
## -CNA

(UL/CSA models)

Above 480 V, use of insulating plate Cat. No. IPXXX, to be mounted under the breaker or switch, is required.

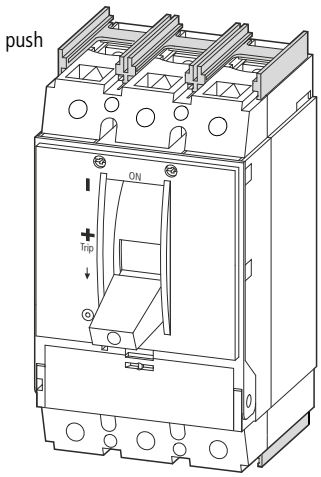


**(en) Caution!**
The removal or exchange of parts during mounting may become necessary.
Refer to installation instructions for proper assembly and to maintain electrical clearances.

**(de) Vorsicht!**
Für die Durchführung der beschriebenen Arbeiten kann das Entfernen oder der Austausch von Teilen notwendig sein. Bitte alle Installations-Anweisungen beachten, um die erforderlichen Luft- und Kriechstrecken nach dem Zusammenbau zu gewährleisten.

**(fr) Attention !**
L'enlèvement où l'échange de certaines pièces pendant le montage est parfois nécessaire.
Consultez l'instruction d'assemblage pour assurer une installation conforme aux normes.

**(es) Atención!**
Con el fin de llevar a cabo los trabajos descritos, puede ser necesario eliminar o cambiar alguna pieza.
Le rogamos tenga en cuenta todas las instrucciones de instalación para así garantizar las líneas de fuga y efluvio necesarias tras el montaje.

**(it) Attenzione!**
Per l'esecuzione degli interventi descritti potrebbe essere necessaria la rimozione o sostituzione di alcuni pezzi.
Attenersi alle istruzioni d'installazione per garantire dopo l'assemblaggio le vie di dispersione necessarie.

**(zh) 小心！**
执行所描述的操作时可能需要拆除或更换零部件。
请遵守所有相关的安装说明，
以确保在组装后能获得需要的空间距离或爬电距离。

**(ru) Осторожно!**
При проведении описанных процедур может возникнуть необходимость демонтировать или заменить детали. Для обеспечения надлежащих зазоров и вывода тока утечки, соблюдайте все инструкции по монтажу.

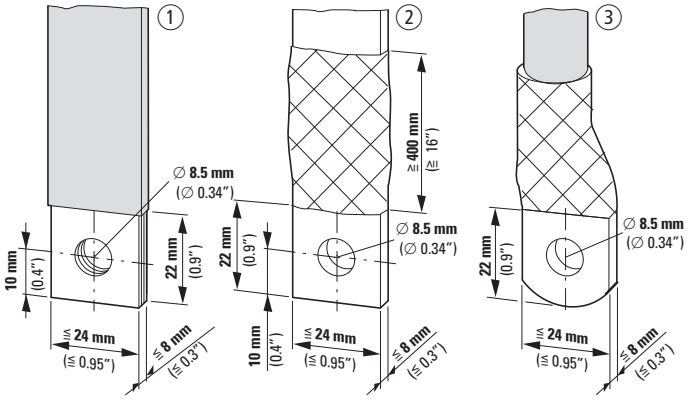


| ① | ② | ③ |
|---|---|---|
| ≧ 2 x 9 x 0.8 mm<br>≧ 2 x 0.35" x 0.03" | ≧ 16 x 5 mm<br>≧ 0.63" x 0.2" | 1 x 4 – 185 mm² |
| ≦ 10 x 16 x 0.8 mm<br>≦ 10 x 0.63" x 0.03" | ≦ 20 x 5 mm<br>≦ 0.8 x 0.2" | 2 x 4 – 70 mm² |
| ≦ 6 x 24 x 0.5 mm<br>≦ 6 x 0.95" x 0.02" | | |

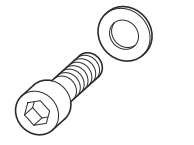

| | |
|---|---|
| 3pol | M8 x 22 |
| 4pol | |




| | |
|---|---|
| A = 95 mm² | KS95-NZM7 |
| A = 120 mm² | KS120-NZM7 |
| A = 150 mm² | KS150-NZM7 |
| A = 185 mm² | NZM2-XKS185 |

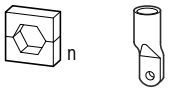


**n**

| | |
|---|---|
| 2 | KS95-NZM7 |
| 2 | KS120-NZM7 |
| 2 | KS150-NZM7 |
| 2 | NZM2-XKS185 |

n = Number of crimps
n = Anzahl der Pressungen
n = Nombre de sertissages
n = Número de compresiones
n = Numero delle crimpature
n = 压制数量
n = Число прессований

11/15 IL01206006Z

**1**

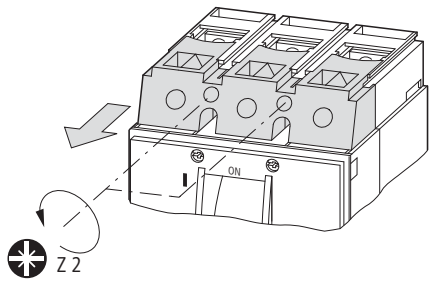


**2**

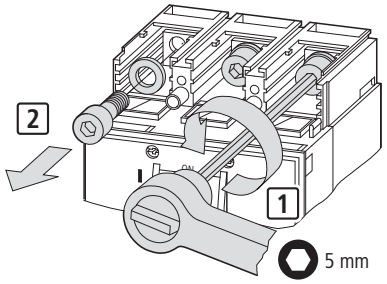


**UL/CSA** models:
Follow diagrams below when making connections using XKS screw terminations for compression crimp lugs:
– Always use terminal cover XKSA when making connections with bare bus or non-insulated crimp lugs, or when two wires per phase are connected.
To mount terminal cover XKSA, refer to instruction sheet **IL01206007Z** (AWA1230-2047).

**3**

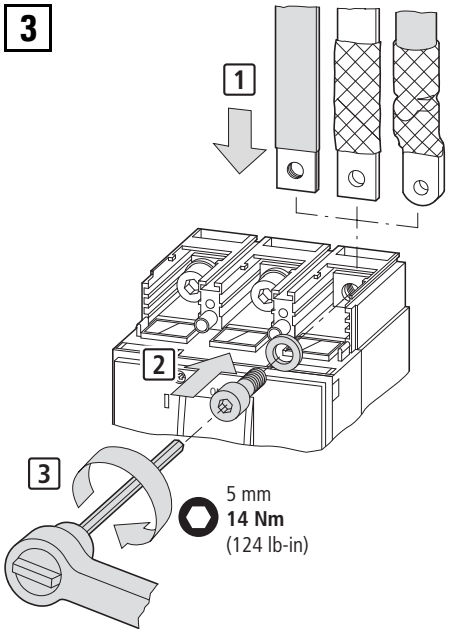



Emergency On Call Service: Local representative (www.eaton.eu/aftersales) or +49 (0) 180 5 223822 (de, en)

## NZMB(C)2(-4)-A160(250)

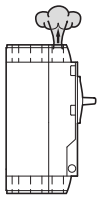

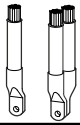
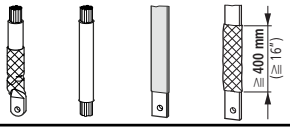



| | | XKSAE | oder* | XKP | oder* | XKSA | | |
|---|---|---|---|---|---|---|---|---|
| ≦ 415 V | ① + | 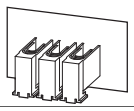 | | 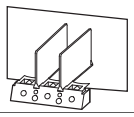 | | 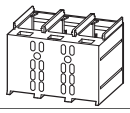 | ① | ① |
| ≦ 525 V | ① + | 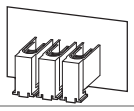 | | 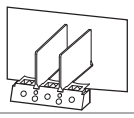 | | 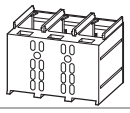 | ① | ① |
| > 525 V | ① + | | | 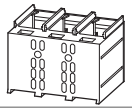 | | | ① | ① |

① Basic device – Grundgerät – Appareil de base – Aparato base – Apparecchio base – 基础设备 – Основное устройство
\+ Combination options – Kombinationsmöglichkeiten – Combinaisons possibles – Combinaciones posibles – Combinazioni possibili 组合方法 – Комбинационные возможности
* or – oder – ou – ó – oppure – 或者 – или

## NZM2(-4)-…300

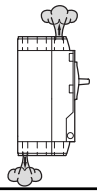

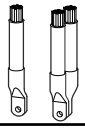
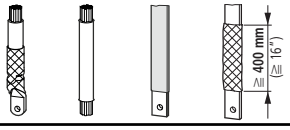



| | | XKSAE | oder* | XKP | oder* | XKSA | | |
|---|---|---|---|---|---|---|---|---|
| ≦ 415 V | ① + | 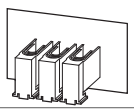 | | 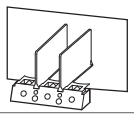 | | 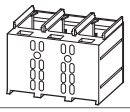 | ① | ① |
| ≦ 525 V | ① + | 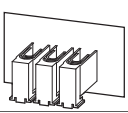 | | 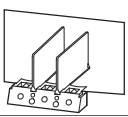 | | 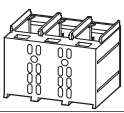 | ① | XKSAE oder* XKP oder* XKSA<br>① + 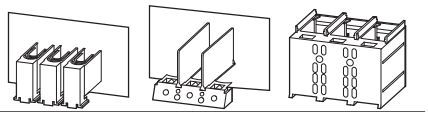 |
| ≦ 690 V | ① + | XKSA<br>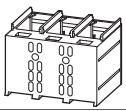 | | | | | XKP oder* XKSA<br>① + 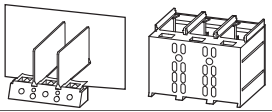 | XKP oder* XKSA<br>① + 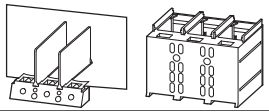 |
| > 690 V | ① + | XKSA<br>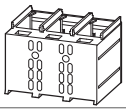 | | | | | XKSA<br>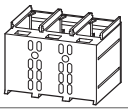 | XKSA<br>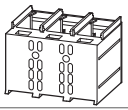 |

① Basic device – Grundgerät – Appareil de base – Aparato base – Apparecchio base – 基础设备 – Основное устройство
\+ Combination options – Kombinationsmöglichkeiten – Combinaisons possibles – Combinaciones posibles – Combinazioni possibili 组合方法 – Комбинационные возможности
* or – oder – ou – ó – oppure – 或者 – или

11/15 IL01206006Z

**NZMB(C)2-A… ≦ 300 A**
**(P)N2(-4)-…**

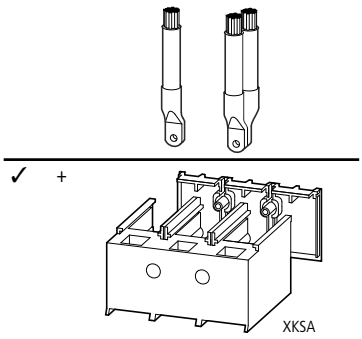


**4**

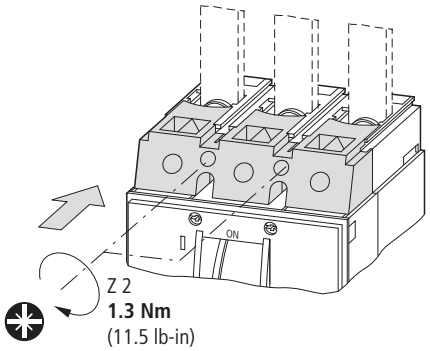


**NZMB(N)(H)(L)2-A(AF)…(-BT)-NA**
**NZMB(N)(H)(L)2-S…(-BT)-CNA**
**NZMN(H)(L)2-VE…(-BT)-NA**
**NZMN(H)(L)2-VEF…(-BT)-NA**
**NZMN(H)(L)2-SE…(-BT)-CNA**
**NZMN(H)2-ME…(-BT)-NA**
**N(S)2-…(-BT)-NA**

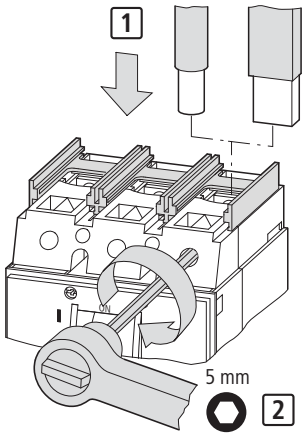


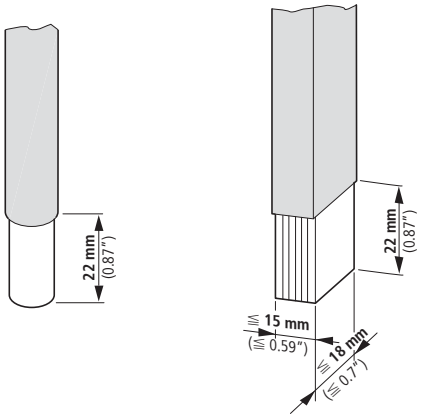


| Nm | | lb-in | |
|---|---|---|---|
| 14 | > 10 mm², > AWG8 | 123 | AWG 8 |
| 5 | ≦ 10 mm², ≦ AWG8 | 44 | AWG 8 |

| | |
|---|---|
| 1x 4 – 185 mm² | ≧ 2 x 9 x 0.8mm<br>≧ 2 x 0.35“ x 0.03“ |
| 2 x 4 – 70 mm² | |
| 1 x AWG12 – 350 kcmil | |

UL/CSA = CU only, Ampacity per 75° C Table.

11/15 IL012060062

**Settings – Einstellung – Réglages – Parámetros – Regolazione –** 设置 **– Настройка**

**1**

**NZMB(C)(N)(H)(L)2(-4)-A(M)(S)…**
**NZM…2-A(AF)…-NA**
**NZM…2-S…-CNA**

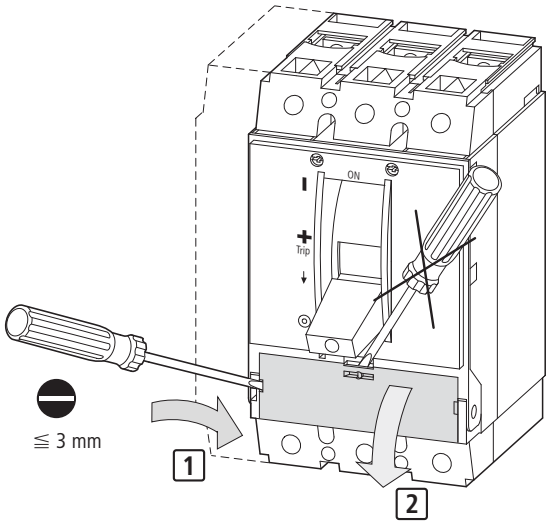


**2**

**NZMB(C)(N)(H)(L)2(-4)-A(M)(S)…**
**NZM…2-A(AF)…-NA**
**NZM…2-S…-CNA**

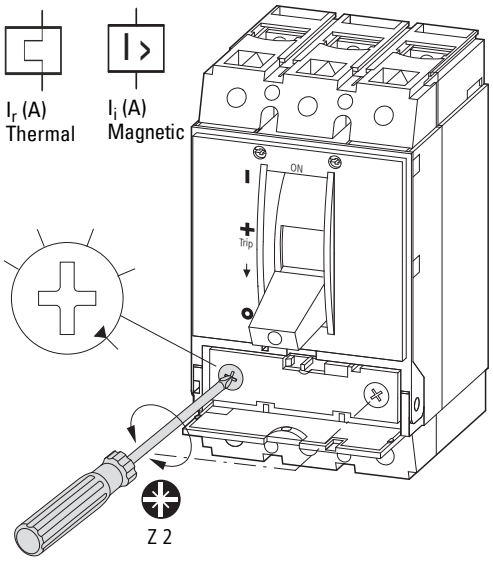


**Note:** On certain models with UL/CSA labeling the thermal trip setting is fixed and only the magnetic trip (instantaneous) setting is adjustable.

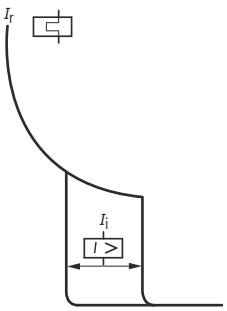


Setting $I_i$ with DC = setting $I_i$ AC/1.35
Einstellwert $I_i$ bei DC = Einstellwert $I_i$ AC/1,35
Valeur de réglage $I_i$ avec DC = valeur de réglage $I_i$ AC/1,35
Valor de respuesta $I_i$ con DC = valore de respuesta $I_i$ AC/1,35
Valore di regolazione $I_i$ con DC = valore di regolazione $I_i$ AC/1,35
DC 的设置值 $I_i$ = AC/1.45 的设置值 $I_i$
Значение $I_i$ при постоянном токе = $I_i$ при переменном токе /1.35


Emergency On Call Service: Local representative (www.eaton.eu/aftersales) or +49 (0) 180 5 223822 (de, en)

## NZMN(H)(L)2(-4)-VE(ME)…

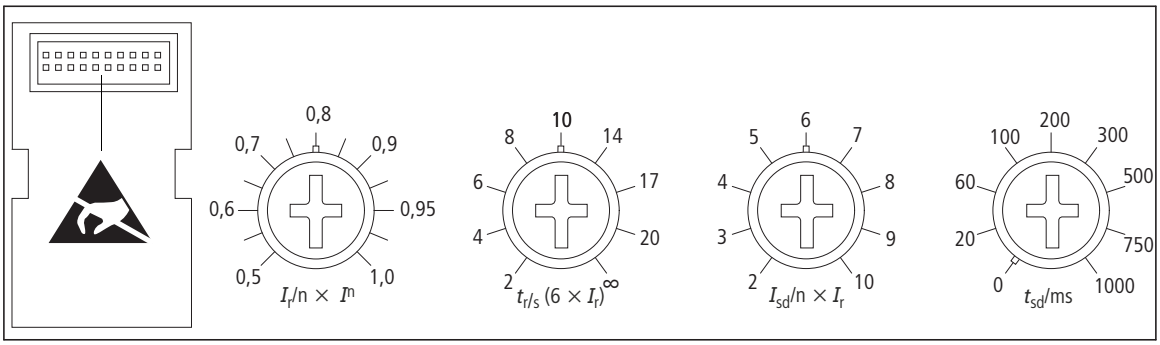


## -NA, -CNAUL/CSA Electronic Trip Circuit Breakers

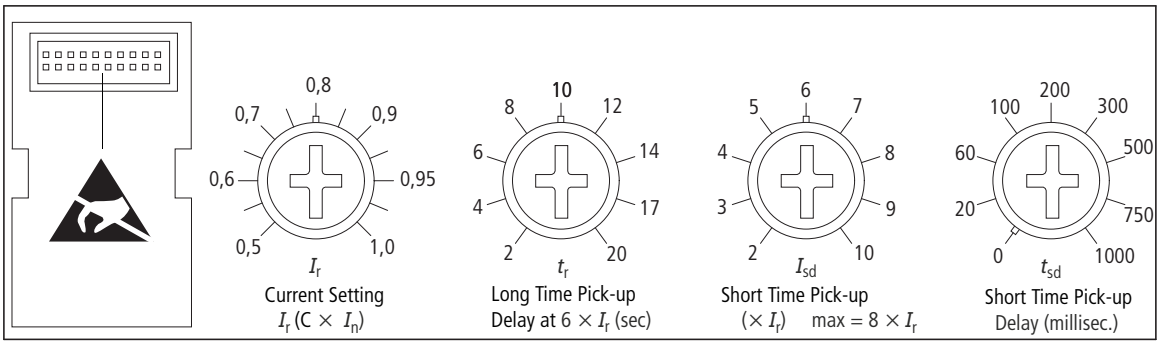


| | | | | |
|---|---|---|---|---|
| NZM2-VE…-NA | x | x | x | x |
| NZM2-VEF…-NA | – | x | x | x |
| NZM2-SE…-CNA | – | – | x | – |

11/15 IL01206006Z

**Settings – Einstellung – Réglages – Parámetros – Regolazione – 设置 – Настройка**

**1**

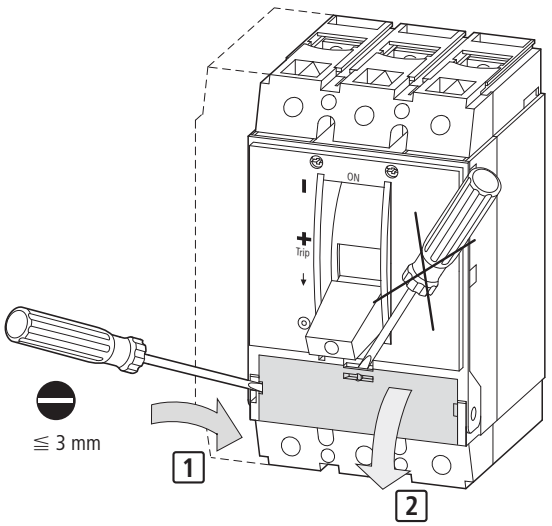


**2** **$I_r$ [A], $t_r$ [s], $I_{sd}$ [A], $t_{sd}$ [ms]**
**Electronic Trip Circuit Breaker Adjustable settings**

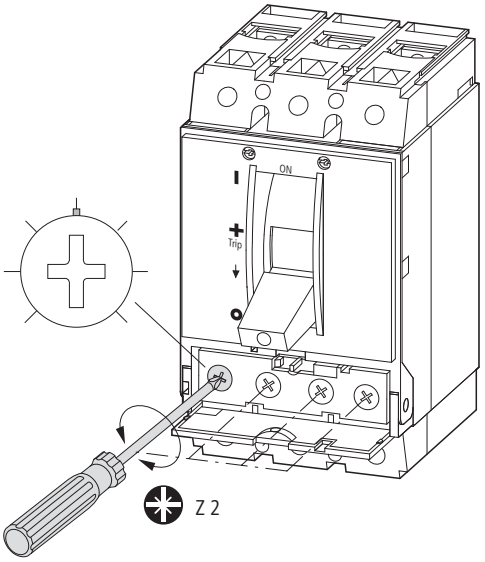


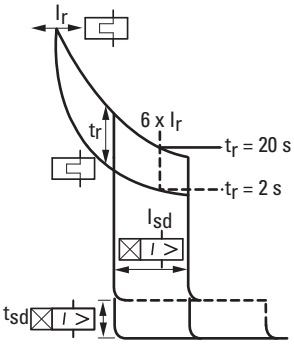


($I_n$ = Max. current rating)
$I_r$ = Adjustable current setting (0.5 – 1.0 x $I_n$) for Long Time Pick-up.
$t_r$ = Adjustable Long Time Pick-up Delay (2 – 20 sec.) factory set at 10 seconds.
$I_{sd}$ = Adjustable Short Time Pick-up (2 – 10 x $I_r$) factory set at 6 x $I_r$.
$t_{sd}$ = Short Time Pick-up Delay (0 – 1000 ms) factory set at 0 ms.
Note: Instantaneous Pick-up fixed at 12 x $I_n$.

## M22-K10
## M22-K01
## M22-CK10
## M22-CK01
## Auxiliary Switches

HIA

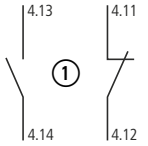


HIN

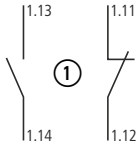


HIN

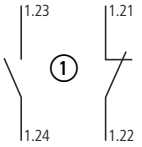


① or – oder – ou – ó – oppure – 或者 – или

**-NA**
**-CNA**
**(UL/CSA)**

$I_{th} = I_e$

| $U_e$ (V) | $I_e$ (A) |
|---|---|
| 600 AC | 5 A |
| 250 DC | 1 A |

Pilot Duty Ratings:
B 600, Q 300
Above 300 V AC
Same polarity

**Notes on mounting and wiring Auxiliary Switches for UL/CSA labeled models:**
– M22-K(10)(01) have screw terminals. M22-CK(10)(01) have clamp terminals.
– Switch modules are snapped into place at the locations shown in the diagrams that follow.
– Switches will function as either „standard“ or „trip/alarm“ contacts depending on their mounting location.
– Location „HIN“ refers to standard operation. Location „HIA“ refers to „trip/alarm“ operation.
– Follow the numbering and wiring scheme provided above depending on the contact location and function. (N.O. or N.C.)
– Permissible contact configuration: 1 HIA and/or 2 HIN.

**Note:**
After mounting of the M22… switch is complete, check off the appropriate box on the auxiliary switch label provided on the side of the breaker or switch.

**IEC**

$I_{th} = I_e$

| | $U_e$ (V) | $I_e$ (A) |
|---|---|---|
| AC-15 | 115 | 4 |
| | 230 | 4 |
| | 400 | 2 |
| | 500 | 1 |
| DC-13 | 24 | 3 |
| | 42 | 1.7 |
| | 60 | 1.2 |
| | 110 | 0.6 |
| | 220 | 0.3 |

## M22-K11
## M22-CK20
## M22-CK02

HIA




① or – oder – ou – ó – oppure – 或者 – или

HIN

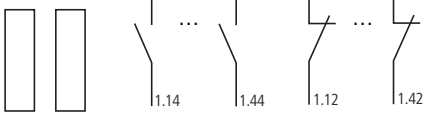


M22-CK11
①
M22-CK20
①
M22-CK02

**IEC**

$I_{th} = I_e$

| | $U_e$ (V) | $I_e$ (A) |
|---|---|---|
| AC-15 | 115 | 4 |
| | 230 | 4 |
| DC-13 | 24 | 3 |
| | 42 | 1 |
| | 60 | 0.8 |
| | 110 | 0.5 |
| | 220 | 0.2 |

11/15 IL012060062

**1**

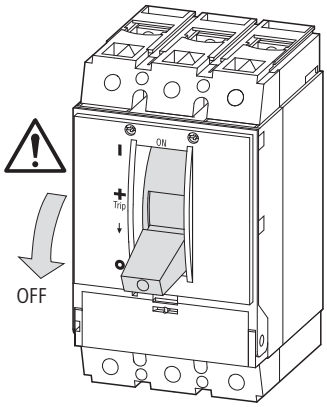


**2**

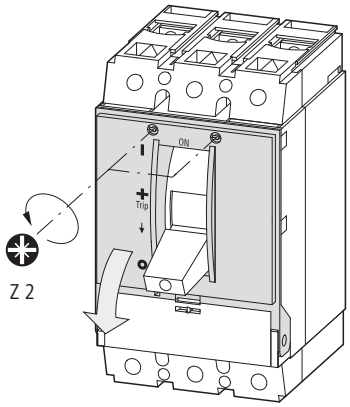


**3**

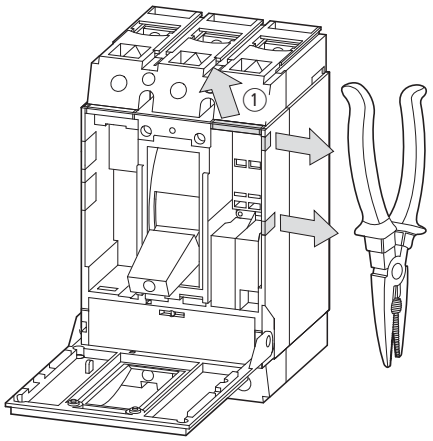


① or oder ou ó oppure 或者 или

**4**

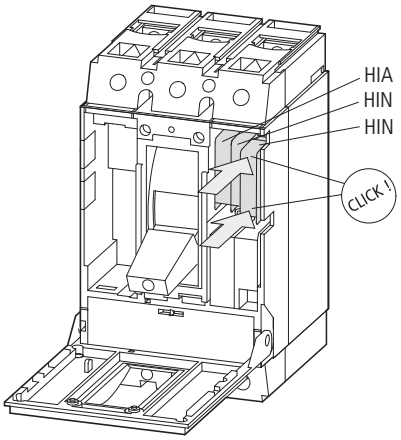


→PN2

## 5a M22-K10, M22-K01

(Screw Terminals)

…K10: N. O. Contact

…K01: N. C. Contact

| | |
|---|---|
| | 2 x 0.75 – 2.5 mm$^2$<br>2 x AWG 18 – AWG 14 |
| | UL/CSA = Cu only |

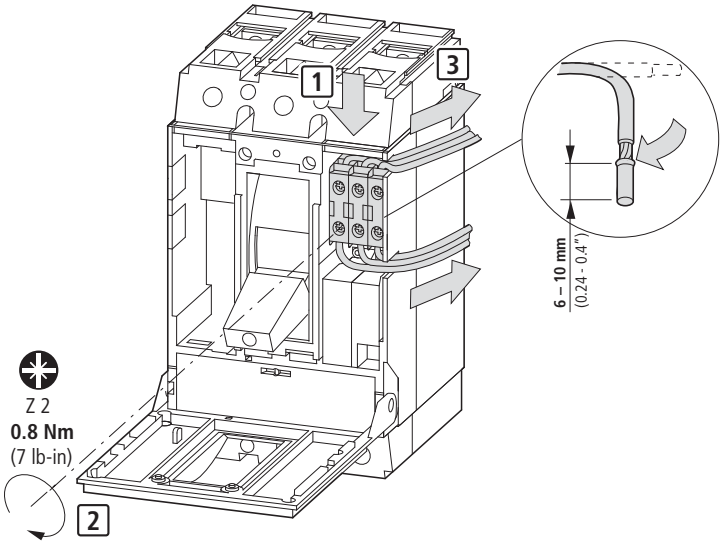


## 5b M22-CK10, M22-CK01

(Clamp Terminals)

| | |
|---|---|
| | 2 x 0.75 – 2.5 mm$^2$<br>2 x AWG 18 – AWG 14 |
| | UL/CSA = Cu only |

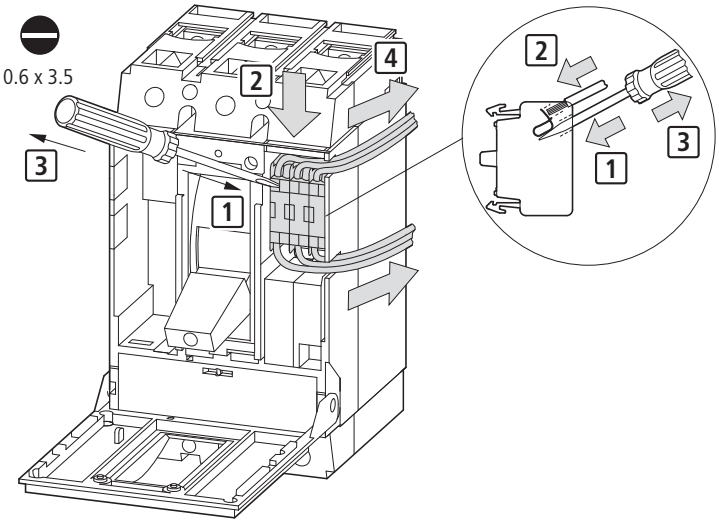


## 5c M22-CK11, M22-CK20, M22-CK02

(Clamp Terminals)

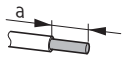


**a = 8 mm**
(a = 0.3")

| | |
|---|---|
| | 1 x 0.5 – 1.5 mm$^2$<br>1 x AWG20 – AWG16<br>2 x 0.5 – 0.75 mm$^2$<br>2 x AWG20 – AWG18 |

## 6

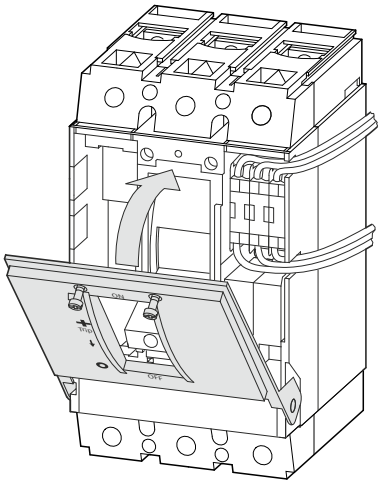

## 7

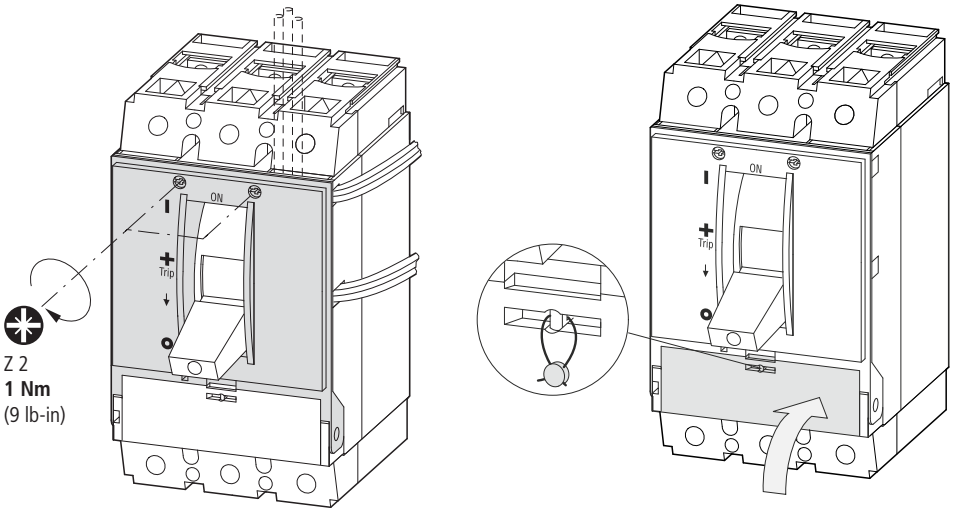


11/15 IL01206006Z

## TEST 1

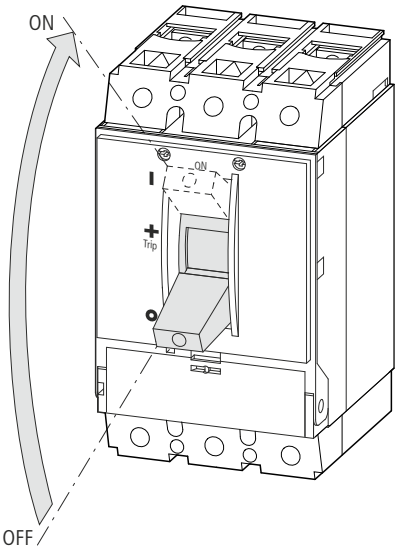


## TEST 2

~~PN2-...(-AP)~~

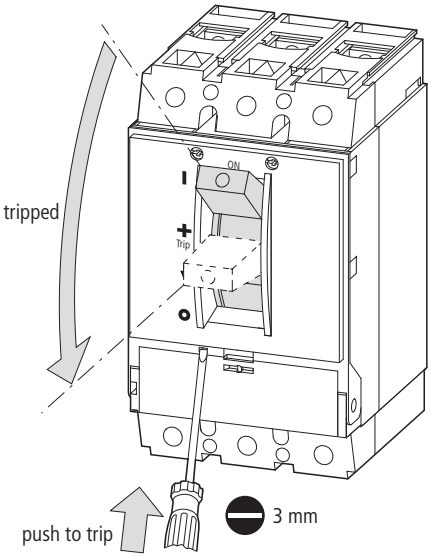


## TEST 3

~~PN2-...~~

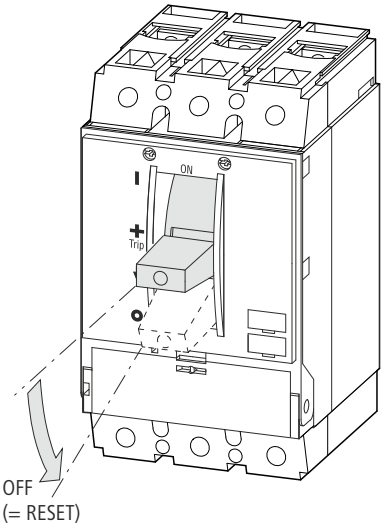


11/15 IL012060062

**Dismounting – Demontage – Démontage – Desmontaje – Smontaggio – 拆卸 – Демонтаж**

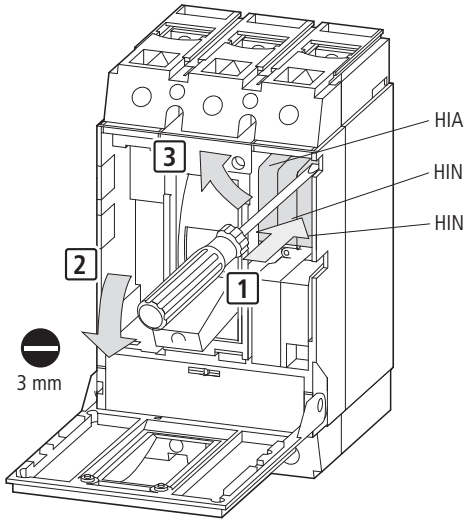

## Mounting – Montage – Montage – Montaje – Montaggio – 安装 – Монтаж

**Insulating plate, Cat. No. IPXXX**

Mounting of insulating plate IPXXX, (shown shaded in the diagram) is required on UL/CSA labeled models for all installations in which the Line Voltage exceeds 480 V.
Mount as shown in diagram.

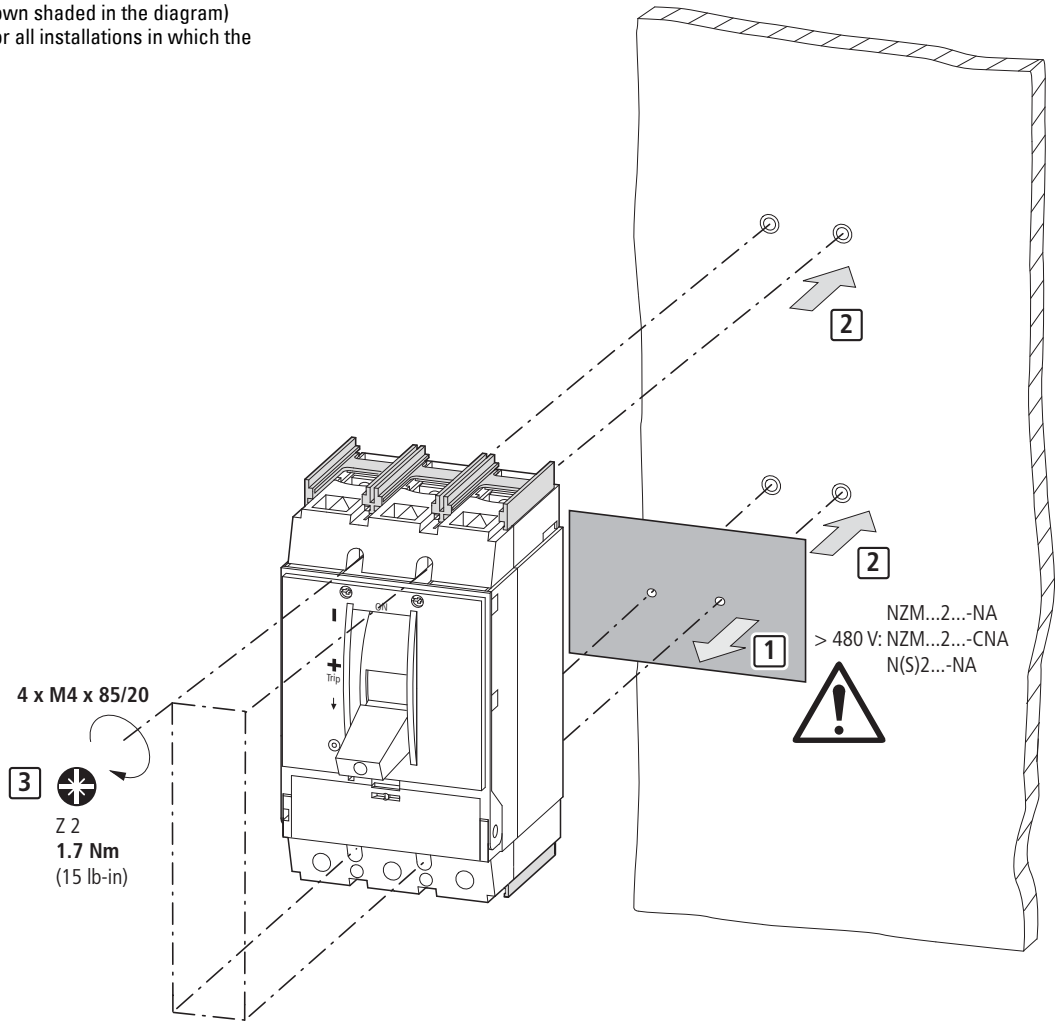


11/15 IL01206006Z

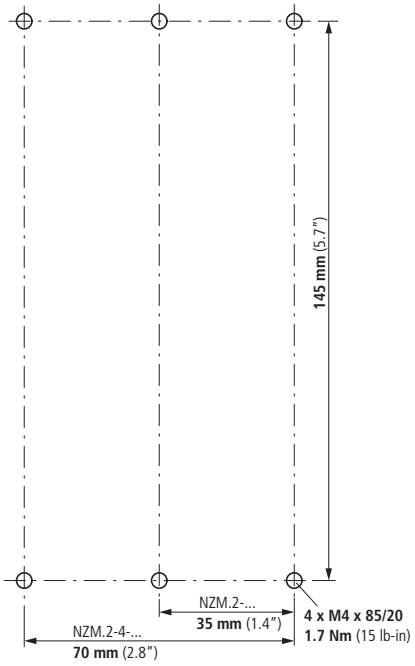


**Wiring terminations circuit breaker type NZM…2…-NA (CNA)**

**Wiring terminations molded case switch type N(S)2…-NA**

| | Connector Type | Wire size | Wire 75° C | Max. A-Rating | Tightening-Torque |
|---|---|---|---|---|---|
| | NZM4-XKC | 1 x AWG 12 – 350 kcmil | Cu only | 250 | 14 Nm (124 lb-in)<br>5 Nm (44 lb-in) (AWG10) |
| | NZM4-XKA | 1 x AWG 6 – 350 kcmil | Cu only | 250 | 30 Nm (265 lb-in) |
| 1) | NZM4-XKS | 1 x AWG 12 – 350 kcmil | Cu only | 250 | 14 Nm (124 lb-in) |
| 2) | Integrated Auxiliary Terminal | 1 x AWG 12 – 18 | Cu only | | 1.2 Nm (11 lb-in) |

1) Connector Pads Type NZM2-XKS for Compression Crimp lugs supplied standard on all NZM2 circuit breakers and switches.
2) Integrated Auxiliary Terminal on Barrel (Tunnel) Mechanical lug Connector Type NZM2-XKA only.



**Eaton Industries GmbH, Hein-Moeller-Straße 7-11, 53115 Bonn, Germany**
**© 2000 by Eaton Industries GmbH, www.eaton.eu/documentation** All Rights Reserved
11/15 IL01206006Z 10045159 DHW
Printed in Germany (12/15)