24571-717 RATIOPACPRO 19" CASE, RETROFITTABLE SHIELDING WITH HANDLES, 3 U, 42 HP, 315 MM



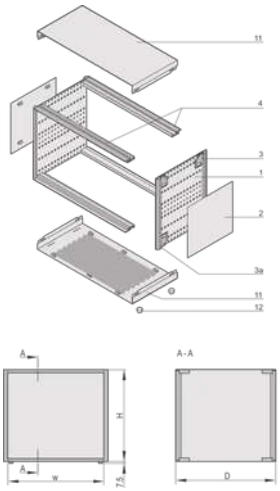

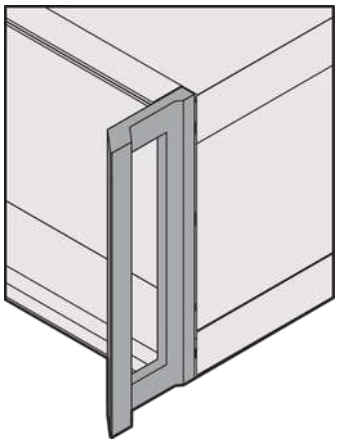

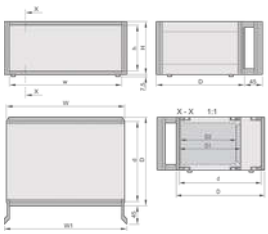

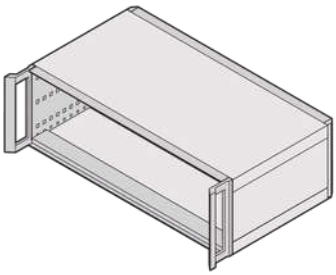

KEY FEATURES

Cases for individual assembly with 19" standard components or specific internal mounting, e.g. with mounting plate
Designed for insertion/extractor handles in accordance with IEC 60297-3-102 and IEEE-1101.10 for CompactPCI and VME64x applications
Version with front handles
Retrofittable EMC shielding
For board depth 160 mm, 220 mm, 280 mm, and 340 mm (depending on case depth)
Symmetrical design, identical front and rear side
No visible screws; cladding parts removable without tools
Conforms with DIN EN 62368-1

PRODUCT ATTRIBUTES

Product Type: Case

Product Family: RatiopacPRO

Type: Case for Individual Electronic Components

Rack Height: 3 U

Height: 132.6 mm

Usable Height: 112.3 mm

Rack Width: 42 HP

Width: 235.5 mm

Usable Width: 219 mm

Depth: 315.5 mm

EMC Shielding: No (Retrofittable)

Static Load: 25 kg

Protection Rating: IP20

Front Frame Construction: Handles; Horizontal Rails

Cooling Option: No

Complies With: IEC 60297-3-101; IEC 60297-3-102; IEEE 1101.1; IEEE 1101.10; IEEE 1101.11

Package Quantity: 1

ADDITIONAL PRODUCT DETAILS

The nVent SCHROFF RatiopacPRO case provides electronics protection for 19" and individual electronic assemblies. This flexible and robust case is simple to convert from desktop to a 19" rack mount case and includes four different style options. This version of the case provides front handles for easier handling of the case.

Modifications (special colours or sizes).

Custom solutions (cut-outs in top cover, base plate or side panels).

Assembly service from 1 piece.

CERTIFICATIONS

RoHS COMPLIANT

DIN

North America
All locations
+1.763.422.2661
Chat with us:
schroff.nvent.com

Europe
Straubenhardt, Germany
+49.7082.794.0
Betschdorf, France
+33.3.88.90.64.90
Warsaw, Poland
+48.22.209.98.35
Assago, Italy
+39.02.932.7141
Chat with us:
schroff.nvent.com

Asia
Shanghai, China
+86.21.2412.6943
Qingdao, China
+86.532.8771.6101
Singapore
+65.6768.5800
Shin-Yokohama, Japan
+81.45.476.0271
Chat with us:
schroff.nvent.com

Middle East & India
Dubai, United Arab Emirates
+971.4.378.1700
Bangalore, India
+91.80.6715.2001
Istanbul, Turkey
+90.216.250.7374
Chat with us:
schroff.nvent.com

nVent

Our powerful portfolio of brands:
nVent.com **CADDY ERICO HOFFMAN RAYCHEM SCHROFF TRACER**

© 2023 nVent. All nVent marks and logos are owned or licensed by nVent Services GmbH or its affiliates. All other trademarks are the property of their respective owners.

nVent reserves the right to change specifications without notice.