WORK HOLDING PRODUCTS AND ACCESSORIES

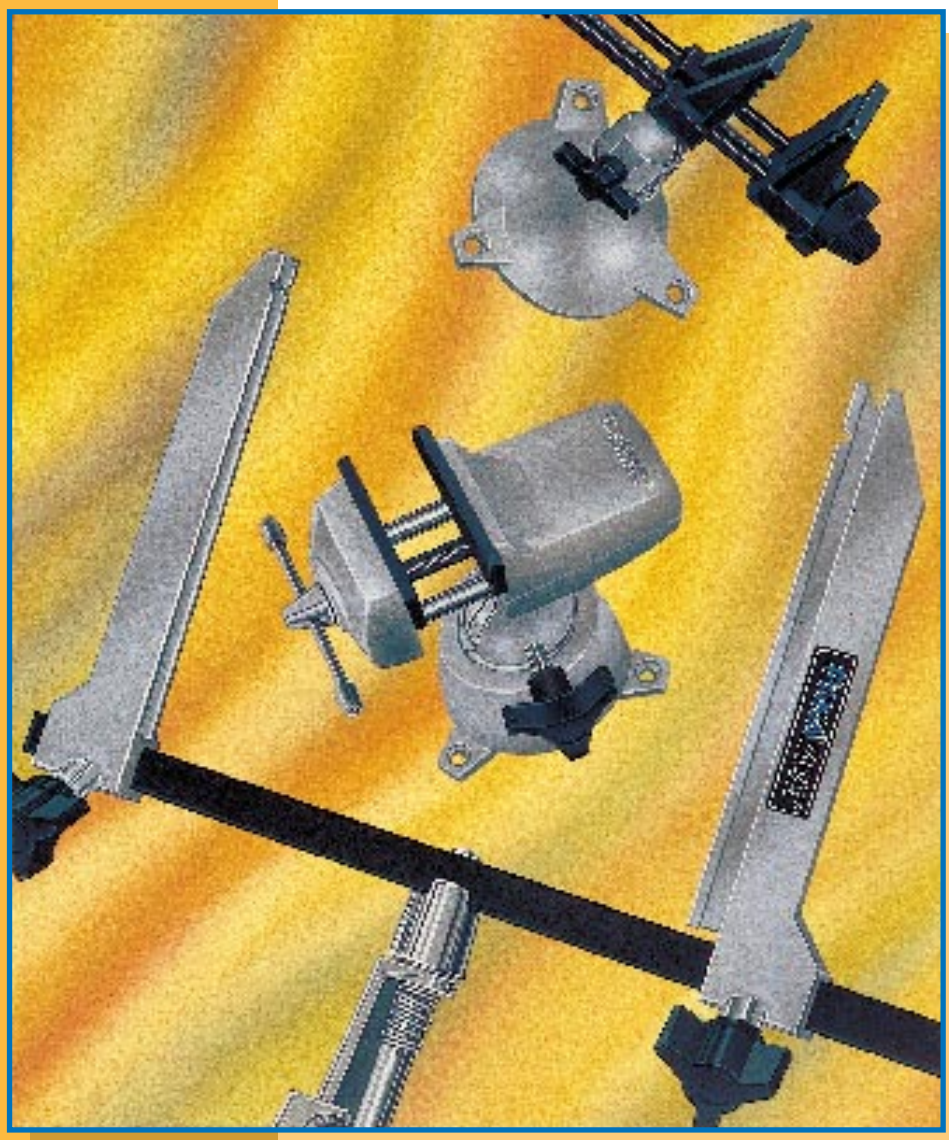

PANAVISE®

About PanaVise...

The PanaVise tradition of innovative quality began over 40 years ago with tool and die maker Otto Colbert. Otto was looking for a way to make his job easier: he wanted a vise that could tilt, turn and rotate his work without continuous removal and repositioning. After some time at the drafting board, he invented the now famous "split ball," an ingenious device that allows a vise head to be positioned through three planes with the turn of a knob. And that simple, yet very helpful, invention formed the core of the PanaVise product line.

From our original Model 301 to our IDC Bench Assembly Press to the latest and very popular PVJr. 201, PanaVise products now serve a variety of needs and industries. By reacting constantly to specialized holding requirements, a full line of devices for the hobby, electronics, metal working and computer industries has been created. There's nearly an endless choice of combinations when you mix and match heads, bases, mounts, and accessories. Work more efficiently and with greater pleasure when you select the PanaVise that's right for you.

Currently distributed throughout the United States and around the world, PanaVise represents superior quality in design, materials and craftsmanship. From simple beginnings 40 years ago, we've become the solid leader in work holding products.

PanaVise: the "hold it anywhere you want it" company.



Table of Contents

WELCOME TO PANAVISE! INSIDE THIS CATALOG YOU'LL FIND A COMPLETE LINE OF WORK HOLDING TOOLS AND ACCESSORIES. ENJOY!

Item/Description	Page Number
Complete Vise Combinations	4-7
Circuit Board Holders	8-9
Circuit Board Accessories	9
Bases	10-11
Heavy Duty Base/Head	11
45/45 Special Movement Base	11
Heads	12-13
Base Mounts	14-15
Vise Accessories	16
Interchangeability Chart/300 Series Vises	17
Presses: Arbor Press	18
IDC Bench Assembly Press	18
Crimp Press	18
Retrofit Kits for Presses	19
Cutters and Accessories	20
IDC Base Plates	21
Crimp Die Sets	21
Displays	22
Warranty Information	23
The PanaVise Story	Back Cover

COMBINATIONS



PVJR. MINI PANAVISE

Model 201 – This popular, small precision PanaVise has all of the traditional "tilt, turn and rotate" features of its big brothers. More like a tool than a vise, the grooved jaws open to 2 7/8" (7.3cm) and are made of fiber reinforced thermal composite alloy (see page 12). Jaws are controlled with a fine/coarse adjusting knob which permits very delicate work. Head movement is through three planes (360° rotation, 360° swivel and 210° pivot) and is controlled with a single knob. The PVJr.'s base is made of die cast zinc for years of continuous use, with a 4 5/16" bolt circle countersunk for 1/4" flathead bolts (not included). Compatible with 300 series base mounts (see page 14). This unique vise is 6 3/4" (17cm) tall, weighs 1 1/4 lbs. (0.6kg), and is packaged in an attractive clamshell which can be hung on a pegboard or set on a shelf.



PVJr. Packaging



STANDARD PANAVISE

Model 301 – The original! The 301 Standard PanaVise is an all-purpose work holding unit, perfect for both industrial and home hobbyist applications. A single knob controls the "tilt, turn and rotate" function of the patented split ball, which allows the head to move easily and conveniently through three planes (360° rotation, 360° swivel and 90° pivot). Jaws are 2 1/2" (6.4cm) wide and open to 2 1/4" (5.7cm), and the base features a 4 5/16" bolt circle. The combination stands 6 3/4" (17cm) tall, weighs 2 lbs. 11 oz. (1.2kg) and features the 300 Standard Base (see page 10), the 303 Standard Head (see page 12), and the 343 Nylon Jaws (see page 16). Attractively packaged and ready for the most demanding enthusiast!



PANAVISE STARTER KIT

Model 302 – PanaVise heads are interchangeable, and this is the best introduction to that versatility! The 302 PanaVise Starter Kit features our two most popular heads: the 303 Standard Head with 343 Nylon Jaws (see pages 12 and 16), and the 366 Wide Opening Head with deep-ribbed, neoprene 346 Jaw Pads (see pages 13 and 16). Both heads are interchangeable with the 300 Standard Base (see page 10), and offer full "tilt, turn and rotate" capabilities. This is the best way to find out why *"two heads are better than one!"* The PanaVise Starter Kit is packaged in a single box for maximum sales potential.

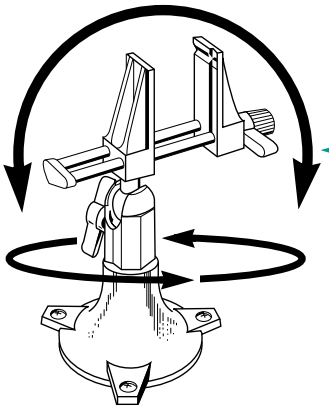

Full "tilt, turn and rotate" capabilities are built into every PanaVise!



Portable PanaVise with Wide Opening Head

Model 309 – It's easy to move your PanaVise wherever you need it when you use a portable PanaVise combination! The 308 Weighted Base Mount is 5 lbs. (2270g) of sturdy support (see page 14). Add to it a 305 Low Profile Base (see page 10) and a 366 Wide Opening Head (see page 13), and you've got full "tilt, turn and rotate" control in a versatile, mobile package. This combination stands 7 1/4" (18cm) tall and weighs a total of 7 lbs. 13 oz. (3.5kg). Attractively boxed for stacking and display.



Portable PanaVise with Extra-Wide Opening Head

Model 334 – This portable PanaVise is similar to the 309 combination, but features a 376 Self-Centering Extra-Wide Opening Head (see page 13). Choose this combination if you want easy mobility and you work with heavier objects such as electric motors. The 308 Weighted Base Mount offers 5 lbs. (2.3kg) of sturdy support (see page 14) and the 305 Low Profile Base (see page 10) provides full "tilt, turn and rotate" control. The 334 Portable PanaVise with Extra-Wide Opening Head stands 7 1/4" (18cm) tall and weighs a total of 7 lbs. 15 oz. (3.6kg). Attractively boxed for stacking and display.



Multi-Purpose Work Center

Model 350 – This is one of our most versatile combinations, perfect for home or hobby needs. We start with a 376 Self-Centering Extra-Wide Opening Head (see page 13) which is recommended for holding heavier objects but which can be used to hold delicate ones, too. We include the 300 Standard Base (see page 10) with its single knob for "tilt, turn and rotate control," and finish off with the 312 Parts Tray Base Mount (see page 14). This is an economical and convenient combination – you'll find a million and one uses for it! The 350 Multi-Purpose Work Center stands 7 7/8" (20cm) tall and weighs 5 lbs. (2.3kg). For electronics buffs, a 371 Solder Station can be added for increased versatility (see page 9). Attractively boxed for stacking and display.

All PanaVise 300 series parts – heads, bases and base mounts – are interchangeable! See the chart on page 17.



RC Car Chassis PanaVise

Model 375 – The specially created 345 Grooved Aluminum RC Car Chassis Jaws (open a full 12") hold 10- or 12-scale RC car chassis gently yet firmly for quick work at home or at the track. The 300 Standard Base (see page 10) provides the PanaVise "tilt, turn and rotate"while the 312 Parts Tray Base Mount (see page 14) offers six convenient tools/parts wells. As an added bonus, this combination includes a set of 347 Extra Wide Opening Jaws (with reversible neoprene jaw pads) for work on motors and other small parts. For even more versatility, all 300 series PanaVise heads are interchangeable with the unit (see pages 12-13). The 375 RC Car Chassis PanaVise stands 6 5/8" (17cm) tall and weighs 4 lbs. 11 oz. (2.1kg) – it's the perfect pit stop! Attractively packaged and ready for the most demanding enthusiast!



Vacuum Base PanaVise

Model 381 – The 381 Vacuum Base PanaVise is a combination of the 380 Vacuum Base (see page 10) and the 303 Standard Head (see page 12). This combination provides all of the "tilt, turn and rotate" versatility of a 301 Standard PanaVise with the convenience of added portability. A half turn of the mount lever attaches or releases the powerful suction pad and allows rapid set-ups in a variety of locations (for use on smooth, non-porous surfaces only). This combination stands 6 1/8" (15.5cm) tall and weighs 2 lbs. 13 oz. (1.3kg). Attractively boxed for stacking and display.



Wide Opening Head PanaVise

Model 396 – The versatility of the PanaVise product line is evident in this combination: it's simply the 366 Wide Opening Head (see page 13) with the 300 Standard Base (see page 10). This provides a wide gripping head with the full "tilt, turn and rotate" capabilities of the split ball (found in every 300 and 400 serious base). The 396 Wide Opening Head PanaVise stands 7 5/16" (18.5cm) tall and weighs 3 lbs. (1.4kg). Attractively boxed for stacking and display.



Here's the PVJr. (Model 201) holding a small strip of balsa wood so that the hobbyist can apply a thin bead of white glue. The PVJr. provides a sturdy work station for model building, jewelry making, fly tieing...any project that requires the addition of a "third hand!"

Let a unique PanaVise Combination help you with your next project. It's better than a third hand!



Model 334, a Portable PanaVise with Extra-Wide Opening Head, is perfect for model railroad work. In this example, the ends of a tongue depressor were gently inserted into the neoprene jaw pads to create "extensions." We then sized the width to fit snugly inside the box car. When we were ready to paint, we covered the vise with clear plastic wrap to help protect it from spatters.

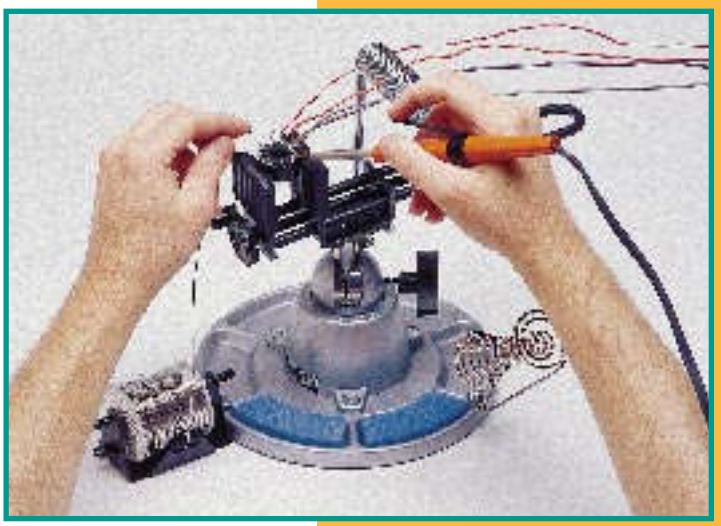

Full interchangeability means we've been able to replace the circuit-board head on the 324 Electronic Work Center (see page 8) with a 366 Wide Opening Head (see page 13). By using the "V" groove side of the neoprene jaw pads, we can easily hold and work on a small switch. The roll of solder is kept close at hand, the soldering iron holder is standing by, and the 359 Universal Holder can neatly separate and keep wire leads available. Also shown is the 312 Parts Tray Base Mount which is included with the 324 Electronic Work Center. This is an example of how you can create a vise which meets your exact needs by interchanging only one head with an existing combination.

Circuit Board Holders



Circuit Board Holder

Model 315 – The 315 Circuit Board Holder will accommodate PC boards of any shape and size, from 1/8" (0.3cm) to 12" (30.5cm) wide. It may be used with any 300 series PanaVise base (see page 10). Add the 318 Accessory Cross Bars and the width can be extended to 30" (76cm). Use the ratcheted pivot and hold PC boards exactly where you want them – horizontal, vertical or any angle in between. Arms may be moved independently in either direction, and may also be positioned adjacent to each other. Additional sets of arms (Model 316) are available for dual or multiple board use. An outstanding feature is the PanaVise spring-tensioned adjustable right arm which equalized the holding pressure on the edge of the board. This allows all sizes and shapes of boards to be held firmly in place. After setting the position of the arms, boards can be removed and inserted repeatedly without further adjustment. The aluminum arms extend 6" (15cm) from the cross bar. Each arm has a "V" shaped grooved to hold boards up to 5/32" (0.4cm) thick. An exclusive second set of "V" notches, positioned laterally near the tips, holds small electronic parts in a secure and convenient position. The stem is 5/8" (1.6cm) in diameter. Overall height (including stem) is 10 7/8" (27.5cm) and the weight is 1 lb. (0.5kg). Attractively boxed for stacking and display.



Electronic Work Center

Model 324 – The PanaVise Electronic Work Center is a complete and economical work bench combination. It delivers a set of circuit board holders, all the tilt, turn and rotate control of a 300 Standard Base (see page 10), and the convenience of a 312 Tray Base (see page 14) and a 371 Solder Station (see page 9). All parts, tooling, wire, soldering iron and PC Boards are located exactly where you want them. Sturdy and stable, the 324's solder holder self-centers wire, and the soldering iron holder keeps the iron at a perfect angle for maintaining proper heat. This combination definitely makes work areas more efficient and manageable. The 324 Electronic Work Center stands 13 1/2" (34cm) tall and weighs 4 1/2 lbs. (2kg). Attractively boxed for stacking and display.



Rapid Assembly Circuit Board Holder

Model 333 – The PanaVise Rapid Assembly Circuit Board Holder features an eight position rotating adjustment and six positive lock positions in the vertical plane. Model 318 Cross Bars are available up to 30" (76cm) in length to hold circuit boards up to 28" (71cm) wide. Extra 316 Circuit Board Arms (see page 9) can be added for dual or multiple board holding. Spring loaded, Model 333 features tilt angle adjustment, height adjustment, and quick board rotation for component insertion and soldering. The 333 Rapid Assembly Circuit Board Holder weighs 6 lbs. 7 oz. (2.9kg). Height from base to top of vertical shaft is 10" (25.4cm). Boxed for easy shelf display.

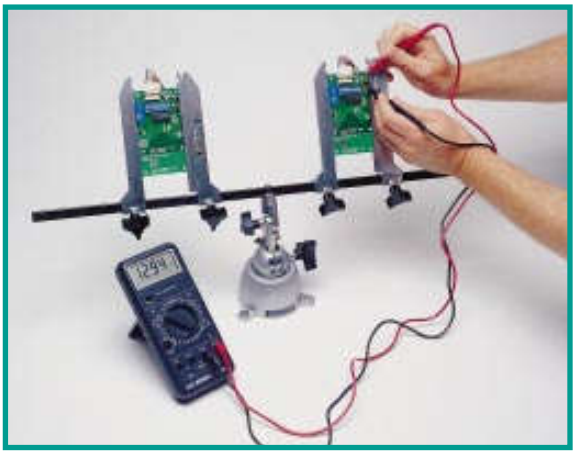

We've added an extra set of 316 Circuit Board Arms to a 372 Circuit Board Holder Combination (see page 9) to permit side-by-side electronics testing. In this example, a newly manufactured circuit board is being tested against a known production master.



Circuit Board Holder Combination

Model 372 – Combine a 315 Circuit Board Holder with a 300 series Standard Base (see page 10), and you've got an economical combination ready to go to work. This circuit board holder will accommodate PC boards of any shape and size, from 1⁄8″ (0.3cm) to 12″ (30cm) in width; add model 318 Cross Bars and you can work on circuit boards up to 28″ (71cm) wide. Extra 316 Circuit Board Arms can be added for dual or multiple board projects. The 372 Circuit Board Holder Combination stands 13″ (33cm) tall and weighs 2 lbs. 6 oz. (1kg). Attractively boxed for stacking and display.

Circuit Board Accessories



Model 316 – The 316 Circuit Board Arms may be used with all combinations that use the 315 Circuit Board Holder. These arms can be ordered as replacements or for use as additional arms for multiple PC board handling.

Model 317 – The 317 Support Unit-Knuckle Assembly is part of the 315 Circuit Board Holder and can be ordered as a replacement part.





Model 318 – The 318 Extra Width Circuit Board Cross Bars are designed for use with the 315 Circuit Board Holder. These longer bars are available in 2″ (5cm) increments from 16″ (40.5cm) to 30″ (76cm).

HOW TO DETERMINE THE MINIMUM CROSS BAR REQUIREMENT

1. Measure the width of the largest circuit board you'll be working on.
2. Add 2" to that width. (This allows for the space required by the circuit board arms – 1" for each arm).
3. The minimum circuit board cross bar required is equal to or larger than the width of the circuit board plus 2"!

Model 319 – The 318 Replacement Knobs are available for the 333 Rapid Assembly Circuit Board Holder.





Model 371– The 371 Solder Station is a combination soldering iron holder and controlled-feed holder for standard spools of solder and wire. Two nib sponges with self-purging slits are included. The station attaches to the PanaVise 312 Tray Base or to the 308 Weighted Base Mount (see page 14) which, with any PanaVise head, creates an extremely convenient and functional work center. It may also be used as a freestanding unit and is easily attached to a bench or wall.

Bases



Standard Base

Model 300 – Holds all 300 series PanaVise heads and Circuit Board Holders. The patented single load control knob and exclusive split-ball feature firmly lock the head into place. Loosening the knob reduces the load on the split ball, permitting the head to be removed from the base. This exclusive feature allows use of numerous heads with one base. By acquiring different heads, a versatile work holding system can be created. This base has three 1/4" countersunk mounting holes on a 4 5/16" bolt circle for attaching directly to a work bench or to a portable Base Mount (see page 14). It is 3 3/4" (9.5cm) high, weighs 1 lb. 7 oz. (0.7kg) and accepts all 5/8" (1.6cm) stems. **Model 300-45** allows the vise head to move 45° on both sides of the vertical plane.

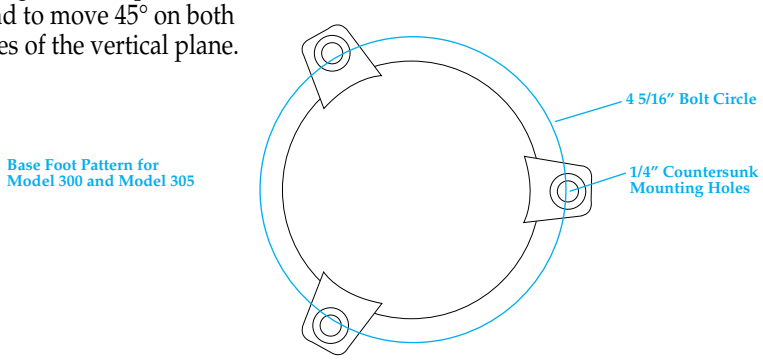



Low-Profile Base

Model 305 – This base has all the tilt, turn and rotate control features of the Standard Base, but it's only 2 1/2" (6.4cm) high. Designed for working close to the bench surface, it features three 1/4" countersunk mounting holes on a 4 5/16" bolt circle for attaching directly to a work bench or to a portable Base Mount (see page14). When used with the 304 Low Profile Head (see page 12), it allows the work to be swung out and away from the bench surface. Weighs 1 lb. 5 oz. (0.6kg) and accepts all 5/8" stems (1.6cm). **Model 305-45** allows the vise head to move 45° on both sides of the vertical plane.



Up/Down Converter Base

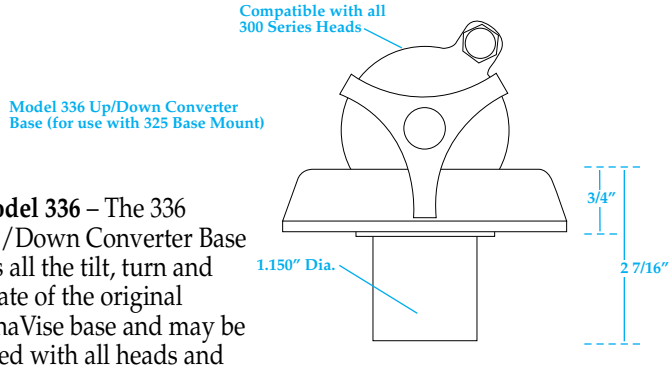

Model 336 – The 336 Up/Down Converter Base has all the tilt, turn and rotate of the original PanaVise base and may be fitted with all heads and Circuit Board Holders. It is specifically designed for use with the 325 Up/Down Positioners, adding the dimension of variable height to your work area. Weight is 1 lb. 1 oz. (0.5kg) and overall height is 3 1/2" (8.9cm).



Vacuum Base

Model 380 – Our Vacuum Base is in wide use for portable applications. Simply flip the lever to "activate" the rubber base and attach the unit to any smooth, non-porous surface. Won't mar or scratch, and easily detaches when the lever is moved. Moistening the pad with water will increase its grip. Holds all regular PanaVise Heads, Circuit Board Holders, and 5/8" (1.6cm) stems with all the "tilt, turn and rotate" of the other bases. Weight is 1 lb. 11 oz. (0.8kg); height is 3 1/4" (8.3cm).

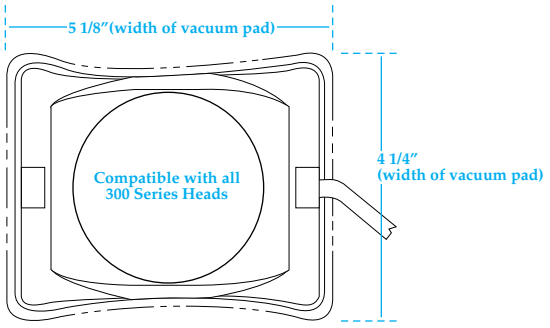



Heavy Duty Base

Model 400 – The 400 Heavy Duty Base has been designed for heavy weights and pressures. It is 4 1/8" (10.5cm) square with four 5/16" (0.8cm) mounting holes. Designed specifically for use with the 437 Heavy Duty Fixturing Head, it will accept any 1" (2.5cm) stem or post. Experience PanaVise "tilt, turn and rotate" control in a heavy-duty base. Internal half balls can be reversed from positive serrated lock to smooth friction lock (disassembly required). Overall height is 3 1/4" (8.3cm); weighs in at 1 lb. 8 oz. (0.7kg).



Heavy Duty Head

Model 437 – The 437 Heavy Duty Head is only used with the 400 Heavy Duty Base. This rugged head gives you a positioning device for working on heavy parts, lawnmower motors, typewriters, etc. It is extensively used as a heavy camera mount. The head is made of heavy cast aluminum, 3" by 6" (7.6cm x 15.2cm) with a 1" (2.5cm) diameter shaft. Overall length (shaft to top of head) is 4" (10cm) and weight is 12 oz. (0.3kg) Shaft is 3 1/4" long (8.3cm).

All PanaVise 300 series bases are compatible with all 300 series heads. Mix and match to suit your needs!

45/45 Base Modification

The Model 300 and 305 bases are available in "45/45" versions which allow the vise head to move 45° on both sides of the vertical plane.

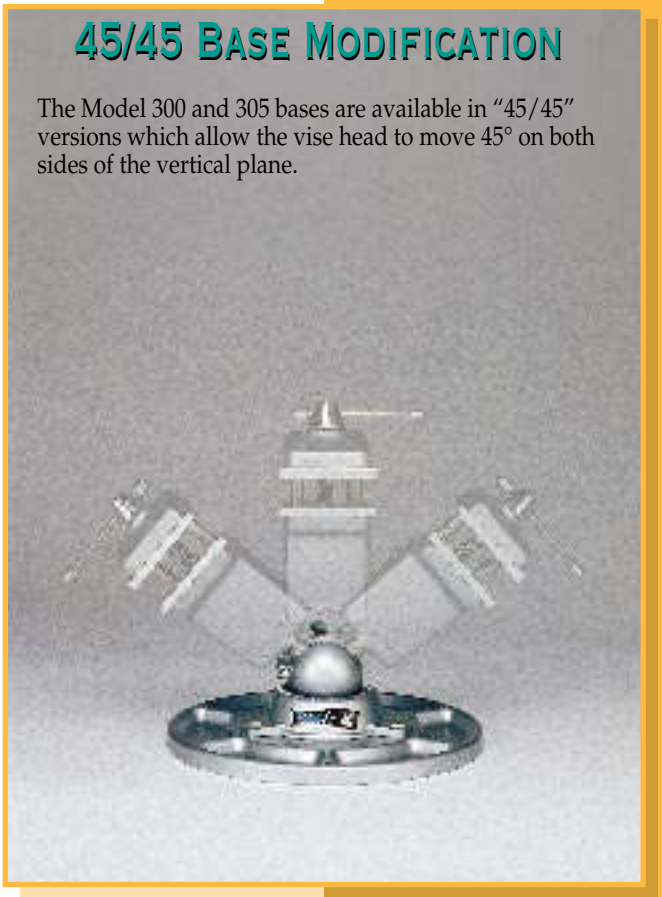

Heads



PVJr. Head

Model 203 – The PVJr. head has been adapted to fit all 300 series bases (see page 10). Perfect for at-home hobbyists and electronics enthusiasts, the grooved jaws open to 2 7/8″ (7.3cm) and are made of fiber reinforced thermal composite alloy [continuous heat tolerance to 350°F (177°c), intermittent heat up to 400°F (204°c)]. Jaws are 1″ wide (2.5cm) and 2″ tall (5.1cm). They are controlled with a fine/coarse adjusting knob which permits work on very delicate objects. The stem is 1″ (2.5cm) long and 5/8″ (1.6cm) in diameter. Overall height is 3 3/4″ (9.5cm); weight is just 6 oz. (0.2kg).

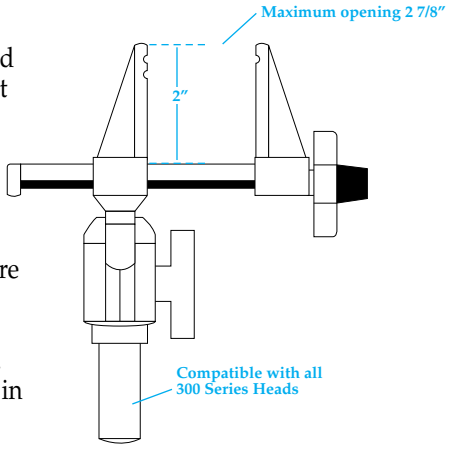



Standard Head

Model 303 – The 303 Standard Head is our best selling head! Jaws are 2 1/2″ (6.4cm) wide and open to 2 1/4″ (5.7cm). The tough, yet gentle, nylon jaws have a satin finish to improve grip. Steel, brass, Teflon® and grooved nylon jaws are available as accessories for this head (see page 16). As a general purpose head, you can't go wrong with its exceptional strength and quality. Fits all 300 series bases (see page 10) with a stem that's 2 1/8″ (5.4cm) long and 5/8″ (1.6cm) in diameter.

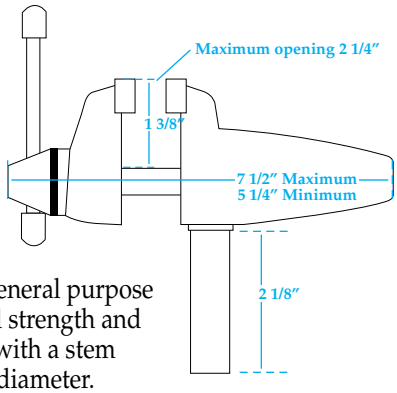



Low-Profile Head

Model 304 – The 304 Low Profile Head has the same basic mechanical features as the 303 Standard Head except that the stem is cast into the base of the head to allow close positioning to the work surface. It is particularly suited for the 305 Low Profile Base, but is compatible with all 300 series bases (see page 10). When used with the Low Profile Base, the head can be swung out and away from the bench surface, a feature that makes it particularly effective for jewelry or lapidary work. The 2 1/2″ wide (6.4cm) jaws are steel and may be interchanged with any of the accessory jaws (see page 16). The stem is 1 5/8″ (4.1cm) long and is 5/8″ (1.6cm) in diameter. Overall length is 7 3/4″ (19.7cm); weight is 1 lb. 7 oz. (0.7kg).

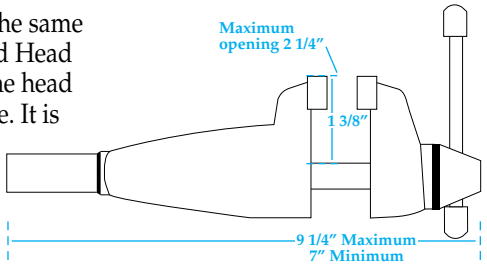



Fixturing Head

Model 337 – The 337 Fixturing Head allows permanent fixturing for production line assembly or repetitive repair. Work can be bolted to this head easily because of its six slots and bolt holes. Wood carvers and pattern makers can easily secure their blanks to this head. The work is held firmly in any position through final finishing. The flat round surface is 5 3/8″ (13.7cm) in diameter. The steel stem is die cast into the aluminum head and is 2″ (5.1cm) long and 5/8″ (1.6cm) in diameter. It is compatible with all 300 series bases (see page 10). Overall height (stem to top of head) is 3 3/4″ (9.5cm) and weight is 11 1/2 oz. (0.3kg).



WIDE OPENING HEAD

Model 366 – The 366 Wide Opening Head is a versatile, general purpose electronics head created especially for production lines, technicians, and designers. This head has great versatility and convenience, making it particularly attractive for a wide variety of users. It opens a full 6" (15cm) to accommodate most PC boards in its molded, deep-ribbed neoprene jaw pads which securely hold them, while offering edge-of-board insulation. When the pads are reversed, the wide "V" can be used for securing delicate cylindrical items such as tuners, coils, motor armatures, etc. Remove the pads from the steel jaw plates when working with high heat. The 366 Wide Opening Head is finished with a satin black oxide coating to reduce flare and promote eye comfort when working under bright lights. The jaw's control knob is micro-adjustable so it exerts the exact amount of pressure you need. The stem is 2 1/4" (5.7cm) long and 5/8" (1.6cm) in diameter which makes it compatible with all 300 series bases (see page 10). Weight is 1 lb. 10 oz. (0.7kg) and the height from the stem to the top of the jaws is 5 1/8" (13cm).

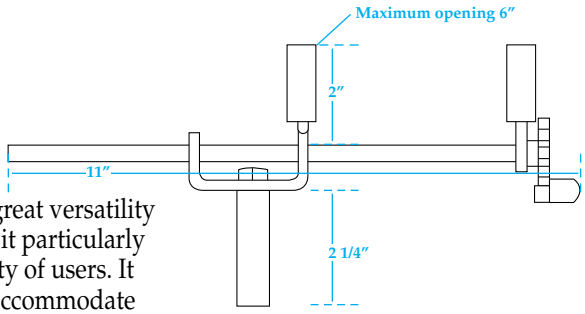



UNIVERSAL HOLDER

Model 359 – The 359 Universal Holder is a handy time-saver designed exclusively for the 366 Wide Opening Head (see above). It neatly separates and holds wire leads or solder right at your fingertips. The tempered coil spring is also a convenient place to keeps small tools close at hand. Pivots away from the jaws when not in use. Attaches easily to the stem of the 366 Wide Opening Head where it remains stationary as the jaws are opened or closed.



EXTRA-WIDE OPENING HEAD

Model 376 – The double action jaws on the 376 Self-Centering Extra Wide Opening Head allow fast opening and closing. The self-centering feature lets you hold heavier objects because the weight is centered over the base. With an extra wide capacity, the jaws open a full 9" (22.9cm). The jaw plates can be reversed to close together, and the reversible jaw pads feature ribbing on one side and a deep "V" groove on the other side for firmly holding cylindrical or odd shaped objects. Compatible with a 300 series bases (see page 10), the stem is 2 1/4" (5.7cm) long and 5/8" (1.6cm) in diameter. Weight is 1 lb. 15oz. (0.9kg) and the height from the stem to the top of the jaws is 5 1/4" (13.3cm).

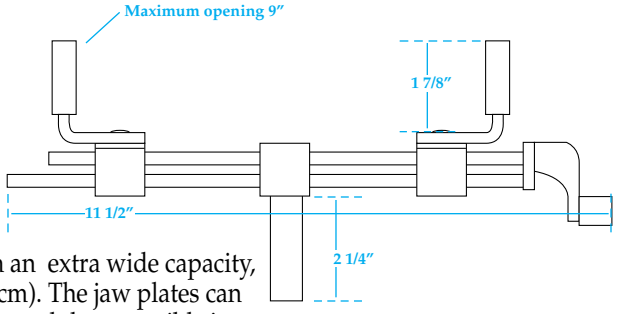

Base Mounts



Weighted Base Mount

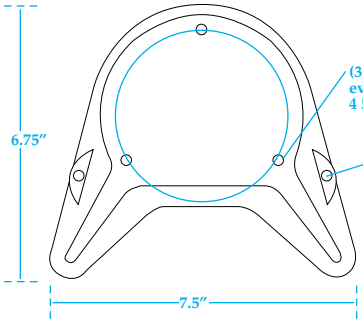

Model 308 Weighted Base Mount

Model 308 – The husky, cast iron 308 Base Mount weighs 5 lbs. (2.3kg), making it compact and stable. Included are four non-marring, anti-skid neoprene base pads. Two 1/4-20 holes are drilled and tapped on the side extension for conveniently mounting accessories such as the model 371 Solder Station (see page 9). Three screws and nuts are included for mounting a base to the weighted base mount.



Surface Plate Base Mount

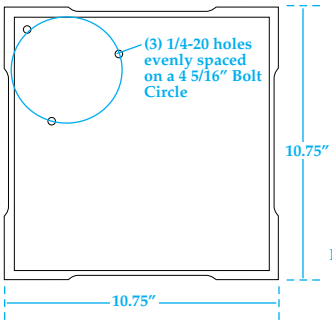

Model 310 Surface Plate Base Mount

Model 310 – The 310 Surface Plate Base Mount is a precision cast iron flat surface (Blanchard ground) ideal for layout work and as a portable PanaVise work station. 10″x10″ square (25.4cm x 25.4cm) and weighing 10 pounds (4.5kg), it has neoprene non-marring, anti-skid pads and is an exceptionally stable Base Mount. The top surface is drilled and tapped in one corner for the 300 Standard Base or the 305 Low Profile Base (see page 10). Mounting screws are included.



Bench Clamp Base Mount

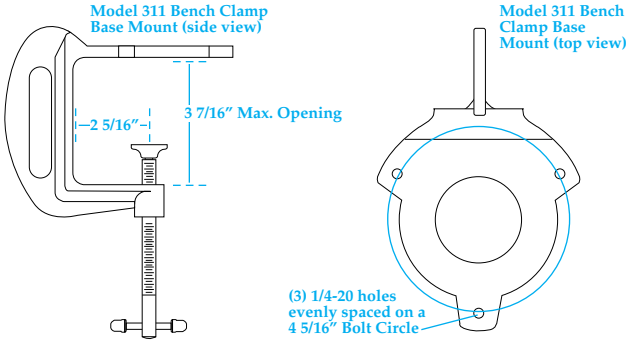

Model 311 – The 311 Bench Clamp Base Mount is for the 300 Standard or 305 Low Profile Base (see page 10). It clamps to the edge of any work bench or table up to 3 7/16″ (8.8cm) thick. Four neoprene pads are included and may be used when additional anti-slip characteristics are desired without excessive tightening of the clamping screw. Using the pads also helps prevent marring of table surfaces. Three screws are included for mounting a base to the bench clamp. Weighs 2 lbs. 6 oz. (1kg).



Parts Tray Base Mount

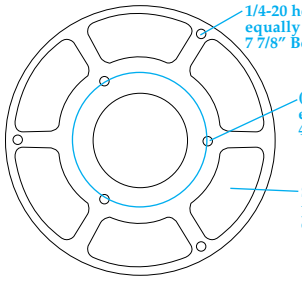

Model 312 Parts Tray Base Mount

Model 312 – The cast aluminum 312 Parts Tray Base Mount attaches to either the 300 Standard or 305 Low Profile Base (see page 10). This is a very stable work platform, plus it's easily portable. Six individual trays are cast into it, much like a "lazy susan," to neatly hold small parts and tools. The walls of the trays are rounded and sloped for easy parts removal. Should a part be dropped, the mount is extra wide to help catch it, making them quick and easy to retrieve. The mount is 8 1/2″ (21.6cm) in diameter, and comes with six non-marring anti-skid neoprene base pads. Three drilled and tapped 1/4-20 holes on the outer lip are provided for mounting accessories. Weighs 1 lb. 14 oz. (0.8kg).

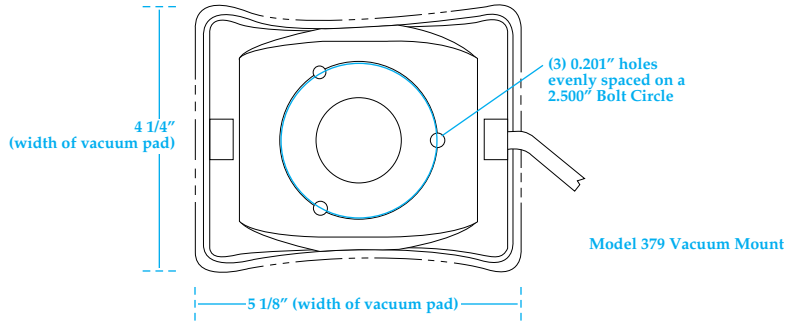

Model 379 Vacuum Mount



VACUUM MOUNT

Model 379 – The 379 Vacuum Mount features a heavy duty suction pad which attaches firmly to any non-porous, smooth surface (stainless steel, porcelain, smooth formica, glass, etc.) with a simple lever action. The mount's flat surface, 3″ x 3 1/4″ (7.6cm x 8.3cm), is pre-drilled for attaching your own instruments or devices. Three 0.215″ (5mm) holes are drilled on a 2 1/2″ (6.4cm) bolt circle. Mount a telescope or a camera on it. Attach a handle to it and use it for carrying glass. Or, use it as a base mount for medical examination devices. Weighs 13 oz. (0.4kg). Height is 1 1/2″ (3.8cm).



UP/DOWN POSITIONER

Model 325 – The 325 Up/Down Positioner is used with the 336 Up/Down Convertor Base (see page 10) or the 340 Deluxe Fixturing Head (shown below). Sit or stand when you work with the useful work position. Adjusts up or down 14″ (35.5cm) in seconds. Clamps to benches up to 2 1/2″ (6.3cm) thick. Weighs 2 lbs. 14 oz. (1.3kg).

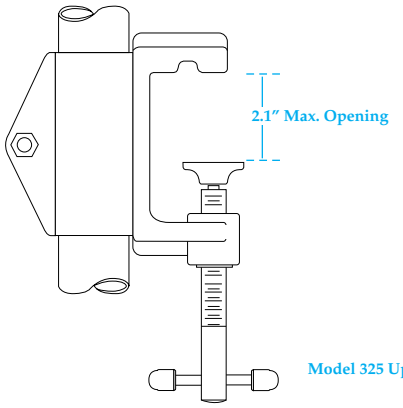

Model 325 Up/Down Positioner



DELUXE FIXTURING HEAD

Model 340 – The 340 Deluxe Fixturing Head is designed for exclusive use with the 325 Up/Down Positioner (shown above). Work can be bolted to this head easily because of its six slots and bolt holes. Wood carvers and pattern makers can easily secure their blanks to this head. The work is held firmly in any position through final finishing. The flat round surface is 5 3/8″ (13.7cm) in diameter.

Accessories



PVJr. Stem for 300 Bases

Model 202 – Use this clever adapter so your 203 PVJr. head (see page 12) will fit any standard 300 series base (see page 10).



366 Stem

Model 307– Multi-purpose 5/8" (1.6cm) stem. Attach your own head or device to this stem...it fits all 300 series bases.



Neoprene Jaw Pads

Model 346 – The reversible 346 Neoprene Jaw Pads are used with the 366 Wide Opening Head and the 376 Self-Centering Head (see page 13). These thick, molded pads have a corrugated surface to firmly hold the most delicate items. Flip the pad around and use the wide "V" to hold round objects.

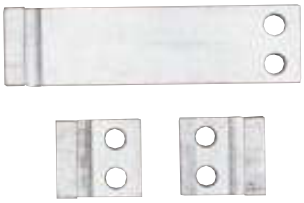

RC Car JawPlates

Model 345 – This set of aluminum jaws converts a 376 Wide Opening Head (see page 13) into the perfect RC car chassis pit stop. Two short arms and one long arm are included so you can size the converted head to fit any size chassis.



Jaws for 303 and 304 Heads

Model 343 – The 343 Nylon Jaws are included with the 303 Standard Head (see page 12). These jaws offer excellent electrical insulation and gentle holding power. Made of type 66 nylon, they will withstand intermittent heat to 300°F (149°C), or a continuous 200°F (193°F).

Model 344 – The 344 Grooved Nylon Jaws are similar to the 343 Nylon Jaws except that they have a small horizontal groove running the width of the jaws. Perfect for holding small tubes, rods, and circuit boards firmly in place.

Model 352 – The 352 Teflon® High Heat Jaws are specifically designed for high heat environments. Jaws won't mar delicate pieces and have an 840°F (499°C) intermittent heat rating and a 500°F (260°C) continuous heat rating.

Model 353 – The 353 Plated Steel Jaws are included with the 304 Low Profile Head (see page 12). These husky jaws are recommended when working with high heat or heavy objects.

Model 354 – The 354 Brass Jaws are a non-marring alternative to the 353 Steel Jaws for heavy or high heat applications.

Hold It! Anywhere you want it.

Let PanaVise bring our famous "tilt, turn and rotate" capabilities to your work bench. One quick turn of the control knob and you can securely position your work exactly where you want it. There's a PanaVise product to fit your exact needs. Use the chart below to build your own combination of *interchangeable* heads, bases and base mounts (all sold individually or in pre-selected combinations). There's also a wide variety of accessories to assist you in any project. You'll discover that our robust work holding devices will be some of the most used and useful tools on your work bench...enjoy!

HEADS

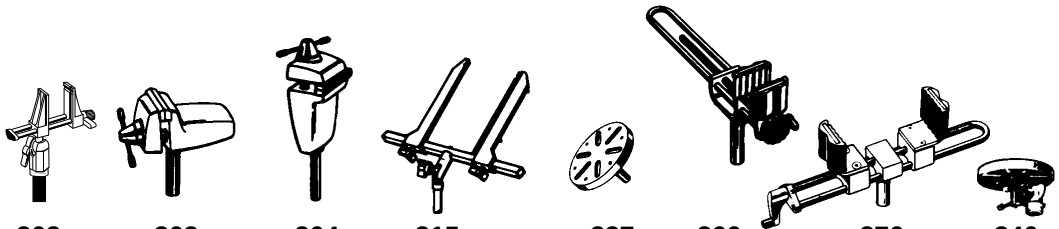

203 303 304 315 337 366 376 340 437

BASES

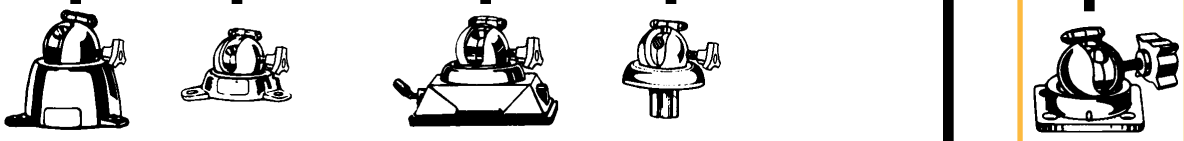

300 305 380 336 400

BASE MOUNTS

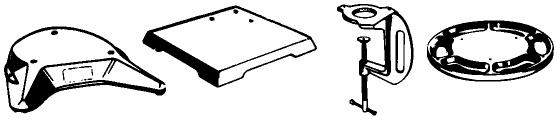

308 310 311 312



325

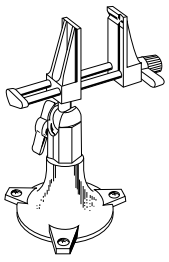

201

ACCESSORIES

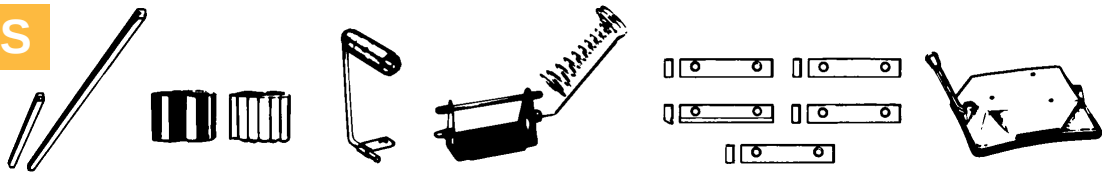

318 346 359 371 353, 343, 344, 352, 354 379

All PanaVise 300 series heads, bases and base mounts are interchangeable!

Presses



Precision PanaPress

Model 502 – The 502 Precision PanaPress weighs less than 6 pounds (2.7kg) and stands 7″ (17.8cm) high (not including moving arm or ram). This hand arbor press exerts pressures up to 1/4 ton and features a reversible ram. Ram is 3/4″x 3/4″ square, 5 7/8″ (14.9cm) long, and tapped at both ends. Four adjustable nylon gibs provide exceptional ram control. The 502 Precision PanaPress is ideal for pressing bearings, sleeves, collars, forming and assembling small parts, punching, riveting, broaching, staking, etc. Weighs 5 lbs. 7 oz. (2.5kg).



IDC Bench Assembly Press

Model 505 – The 505 1/4-ton manual IDC Bench Assembly Press is a rugged, practical installation tool designed for low volume, mass termination of various IDC connectors on ribbon cable. Four nylon gibs ensure precise directional control of the vertical ram. Interchangeable base plates accommodate a broad range of IDC connectors, and are capable of mass terminating up to 64-pin conductor cable in seconds without wire stripping or soldering. Perfect for independent technicians and in-house service departments. A full series of base plates and cutters are available (see page 20). Customized base plates are available by special order. Stands 7″ (17.8cm) high (not including moving arm or ram) and weighs 6 lbs. 10 oz. (3kg).



Crimp Press

Model 560 – The 560 Crimp Press is a practical tool which delivers quality crimping at an affordable price. Now you can apply even pressure on all crimping surfaces with 1/4 ton of pressure. The 12″ (30.5cm) lever provides a 20:1 leverage ratio that makes the press easy to use while helping to prevent injuries to the wrist, hands, nerves and tendons. More effective than hand crimpers (completely eliminates the "scissors effect") for about the same cost, the 560 Crimp Press will accept your current crimp dies, and accepts standard industry die sets. Perfect for in-house service departments, independent technicians and medium-volume manufacturing operations. Stands 7″ (17.8cm) high (not including moving arm or ram) and weighs 5 lbs. 15 oz. (2.7kg).

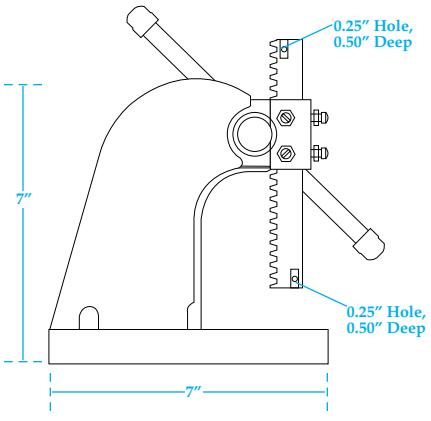

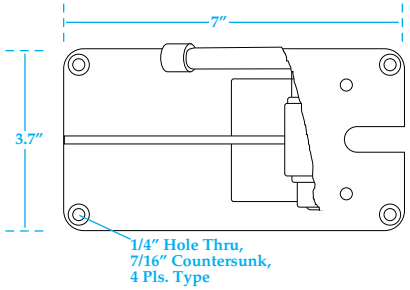

Basic Press Dimensions for Models 502, 505 and 560.

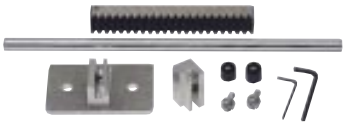



RetroFit Kits

If you already own a PanaPress, IDC Bench Assembly Press or Crimp Press, you may want to use a retrofit kit to convert your press into another press. Retrofit kits come with complete instructions and all hardware necessary for each conversion.

Model 506 – Convert a Model 502 Precision PanaPress into a 505 IDC Bench Assembly Press.

Model 561 – Convert a Model 502 Precision PanaPress into a 560 Crimp Press.

Model 562 – Convert a Model 505 IDC Bench Assembly Press into a 560 Crimp Press.

Model 563 – Convert a Model 560 Crimp Press into a 505 IDC Assembly Press.

At PanaVise, our development philosophy is simple: build tools that solve real-life problems.

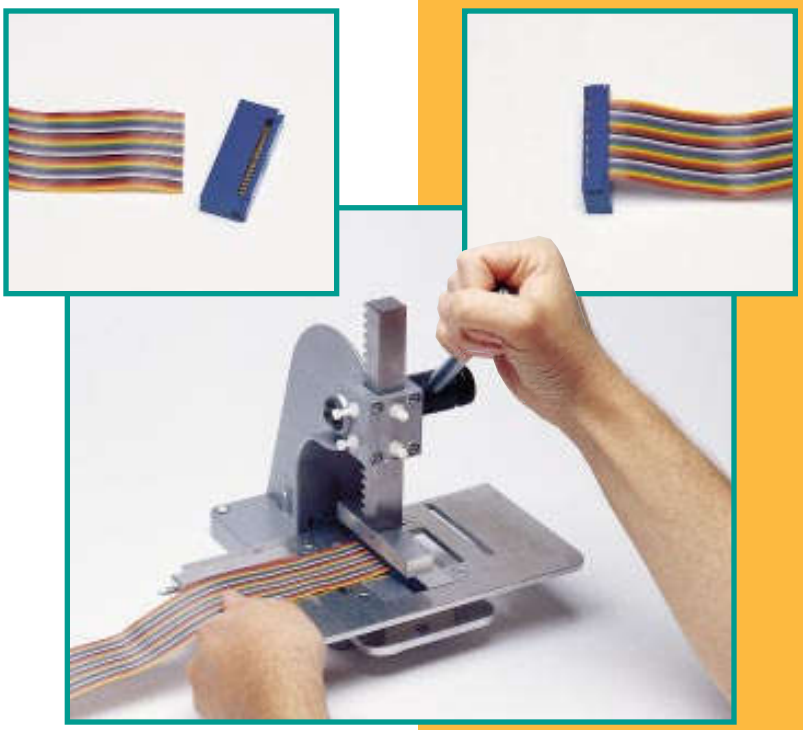

Easy to use and operate, the 505 IDC Bench Assembly Press produces flawless connections without wire stripping or soldering. Simply select the correct base plate for the operation at hand, insert the connector, line up the ribbon cable, and apply pressure by turning the arm. The press shown above may be easily converted to work with crimp dies by using a 562 Retrofit Kit.

Press Accessories



Flat (Ribbon) Cable Cutter

Model 507 – The 507 Flat (Ribbon) Cable Cutter will deliver consistent right-angle cuts on up to 64-conductor cable. Easy to use and operate, simply insert the cutter into the 505 IDC Bench Assembly Press and make perfect cuts every time.

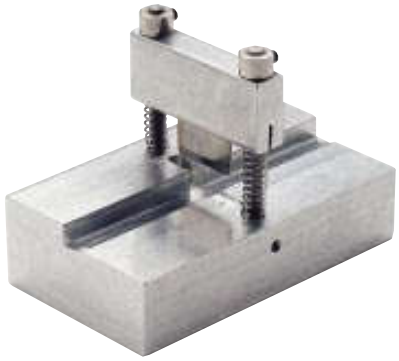

Strip Header (IDC) Cutter

Model 508 – The 508 Strip Header (IDC) Cutter allows clean cuts for various strip header lengths. This cutter is similar to Model 507 in that it is easy to use and operate, but it has a shortened blade and is grooved to accept industry standard strip headers.



Replacement Accessories

Model 530 – The 530 Replacement Blades fit into the 507 Flat (Ribbon) Cable Cutter. Three blades are included in the blister pack.

Model 531 – The 531 Replacement Blades fit the 508 Strip Header (IDC) Cutter. Three blades are included in the blister pack.

Model 532 – The 532 Replacement Guide Arm is identical to the guide arm that comes with the 505 IDC Bench Assembly Press and the 506 and 563 Retrofit Kits (see page 18).

Base Plates and Die Sets



IDC Base Plates

IDC Base Plates for the 505 IDC Press are fully interchangeable and accommodate a broad range of IDC connectors.

510 Series – For Female Socket Transition Connectors.

511 Series – For Card Edge Connectors.

512 Series – For DIP Plugs.

513 Series – For D-Sub Connectors.

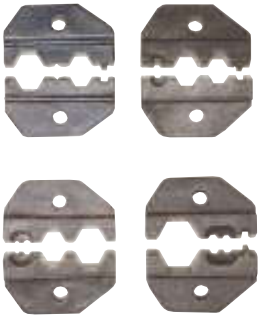

Crimp Die Sets

Dozens of crimp dies are available for use with the 560 Crimp Press. Following are some general examples.

565-0001 – Standard Crimp Dies
RG58/59/62

565-0002 – Standard Crimp Dies
RG59/BEL 8281 BNC HEX

565-0004 – Standard Crimp Dies
RG58/59/62

565-0008 – Standard Crimp Dies
Cambridge
RG58/59 BNC Hex CP88/89

For complete availability listings, contact your PanaVise representative!

Displays



PVJr. Display

Model 201MT – When you want to show off one of our best sellers, the 201MT display is the perfect size for the PVJr. Colorful, eye-catching graphics help "talk" to customers and suggest a variety of uses for the PVJr. Compact size means it can go almost anywhere! Pre-drilled and ready-to-go, mounting screws and nuts are included.
(5 3/4" wide x 7" deep x 16 1/4" high)



115 Display

Model 115 – Attract customer attention with this eye-catching point-of-purchase display. Hold up to four different combinations and display with pride. Unit is pre-drilled on the top so you can attach any combination that uses the 300 Standard Base or 305 Low-Profile Base (mounting screws and nuts are included).
(18" wide x 11" deep x 24" high)



116 Display

Model 116 – Compact and lightweight, this display is perfect for close spaces. Holds up to three product combinations (mounting screws and nuts included) and includes a handy literature holder for PanaVise's mini catalog. If you have limited counter space or gondola shelving, this would be the perfect display to show off your PanaVise product line.
(15" wide x 10" deep x 13" high)

PanaVise products are protected under one or more of the following U.S. Patents: 5,187,744; 5,118,058; 3,661,376; 2,898,068. Patents pending on additional products in the U.S. and overseas.

© 1996 PanaVise Products, Inc. Product specifications subject to change without notice.
Product weight and height measurements are approximate.

LIMITED WARRANTY

PanaVise products are warranted against defects in materials or workmanship for one (1) year from date of original consumer purchase. PanaVise Products, Inc. will repair or replace, at its option, the defective product. Product must be properly packaged and shipped prepaid during warranty period. This warranty does not apply to unreasonable use or to damage after purchase (not resulting from defect or malfunction) while in the possession of the consumer. PanaVise is not liable for any incidental or consequential expenses or liability incurred as a result of improper use.

PANAVISE TIMELINE

1956 Tool and die maker Otto Colbert founded Colbert Industries, Inc. (later to be called PanaVise Products, Inc.). To make his work easier, Otto needed a device to tilt, turn and rotate his die cast dies for repair. Thus, the famous "split ball" base was developed and patented.



Model 301

1963 PanaVise begins exporting its products. Today, PanaVise can be found in 23 countries around the world.

1972 PanaVise receives its second patent on the now-famous 300 standard base.

1974 PanaVise develops the Circuit Board Holder as an interchangeable head for the 300 base, and becomes a "standard" in the electronics tool industry.



Model 333 Circuit Board Holder

1978 Colbert Industries is purchased by Gary Richter, our current president. The name of the company is changed to PanaVise Products, Inc. and is relocated to Long Beach, California.

1980 PanaVise begins supplying mounts using the famous split ball to Federal Express for their Mobile Data Terminals (in-vehicle computers). This becomes the largest installed base of Mobile Data Terminals in the world, all held by PanaVise products.



Slimline Phone Mount

1981 PanaVise develops its first Mobile Phone Mount for Xyntel. This product later evolves into the PanaVise 320 Standard Phone Mount.

1982 PanaVise builds special mounts and bases for use in the U.S. space shuttle program.

1988 PanaVise develops the Slimline Cellular Phone Mount, which becomes the most successful product ever developed by PanaVise.



CCTV Camera Mount

1990 PanaVise relocates from Long Beach, California to the high desert of Sparks, Nevada. This expands corporate facilities to 29,000 square feet.

1991 PanaVise enters into the CCTV/Security industry with their own line of CCTV/Security Camera Mounts. Another PanaVise frontier is forged.



PVJr. Miniature Vise

1992 The PanaVise 300 Base is redesigned once more to increase its holding power by 100% and it receives its third U.S. Patent.

1994 PanaVise develops the PVJr. line of miniature vises.

1995 Ground is broken on a new 55,000 square foot plant in Reno, Nevada.

Ask your PanaVise representative about our other product lines.

Communications Mounts



Security Camera Mounts

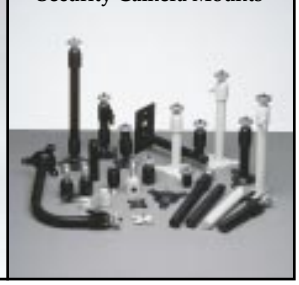

#EC-296

Made in U.S.A

PANAVISE PRODUCTS, INC. 1485 Southern Way, Sparks, NV 89431 USA
Telephone: 702-353-2900 Fax: 702-353-2929