Deep groove ball bearings 6300 (Series 63)

main dimensions to DIN 625-1

The datasheet is only an overview of dimensions and basic load ratings of the selected product. Please always observe all the guidelines in these overview pages. Further information is given on many products under the menu item "Description". You can also order comprehensive information via the Catalogue selection system (http://www.fag.de/content.fag.de/en/mediathek/library/library.jsp) or by telephone on +49 (91 32) 82 - 28 97.

d	10	mm	
D	35	mm	
B	11	mm	
D_1	27	mm	
d_1	18,1	mm	
$D_{a\ max}$	30,8	mm	
$d_{a\ min}$	14,2	mm	
$r_{a\ max}$	0,6	mm	
r_{min}	0,6	mm	
m	0,055	kg	Mass
C_r	8600	N	Basic dynamic load rating, radial
C_{0r}	3450	N	Basic static load rating, radial
n_G	31000	1/min	Limiting speed
n_B	21100	1/min	Reference speed
C_{ur}	174	N	Fatigue limit load, radial

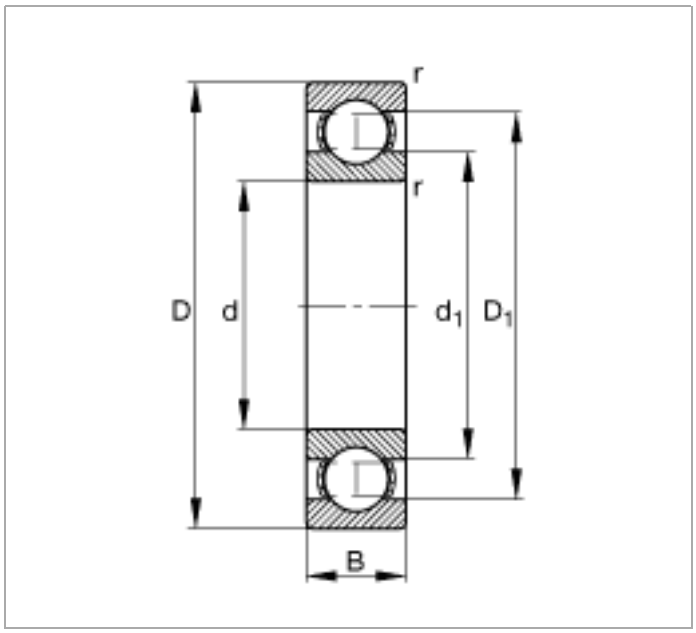
r
r
D
d
d_1
D_1
B

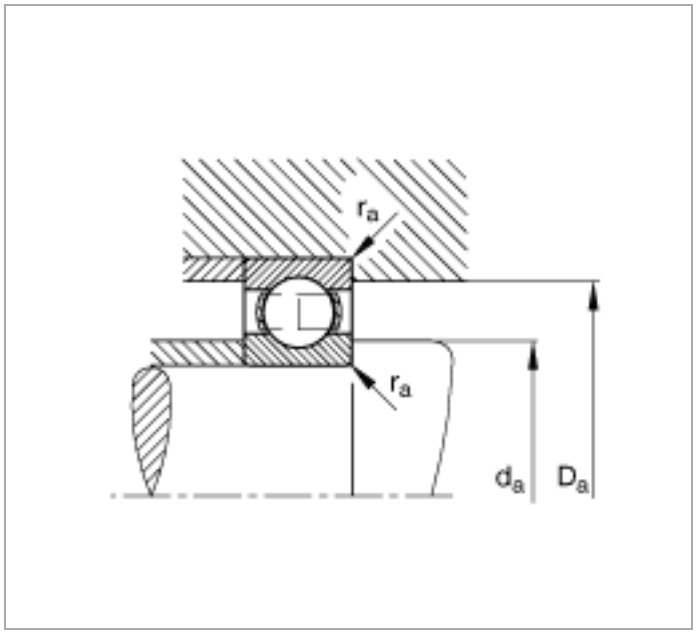
r_a
r_a
d_a
D_a