I35001

Inductive sensor

ILA2002-AROG/OBEN/UP RT

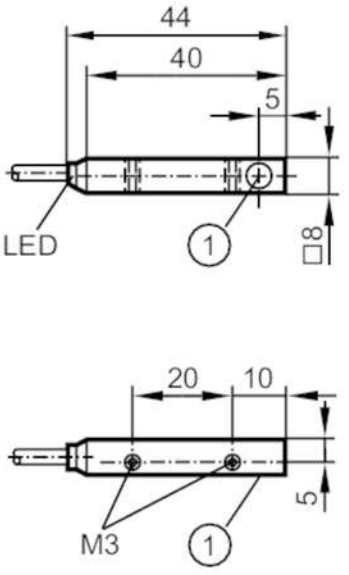

1 Sensing face

Product characteristics		
Electrical design		PNP/NPN
Output function		normally open
Sensing range	[mm]	2
Housing		rectangular
Dimensions	[mm]	40 x 8 x 8
Electrical data		
Operating voltage	[V]	10...36 DC
Protection class		III
Reverse polarity protection		yes
Outputs		
Electrical design		PNP/NPN
Output function		normally open
Max. voltage drop switching output DC	[V]	4.7
Minimum load current	[mA]	4
Max. leakage current	[mA]	0.8
Permanent current rating of switching output DC	[mA]	100
Switching frequency DC	[Hz]	2000
Short-circuit protection		no
Overload protection		yes
Detection zone		
Sensing range	[mm]	2
Real sensing range Sr	[mm]	2 ± 10 %
Operating distance	[mm]	0...1.6

I35001

Inductive sensor

ILA2002-AROG/OBEN/UP RT

Accuracy / deviations			
Correction factor		steel: 1 / stainless steel: 0.7 / brass: 0.5 / aluminium: 0.4 / copper: 0.3	
Hysteresis	[% of Sr]	1...15	
Switch point drift	[% of Sr]	-15...15	
Operating conditions			
Ambient temperature	[°C]	-25...70	
Protection		IP 65	
Tests / approvals			
EMC		EN 60947-5-2	
		EN 55011	class B
MTTF	[years]	3459	
Mechanical data			
Weight	[g]	61	
Housing		rectangular	
Mounting		flush mountable	
Dimensions	[mm]	40 x 8 x 8	
Materials		brass white bronze coated; LCP	
Displays / operating elements			
Display		switching status	1 x LED, red
Remarks			
Pack quantity		1 pcs.	
Electrical connection			

Cable: 2 m, PVC; 3 x 0.14 mm²

Connection



Core colours :
BN = brown
BU = blue