Brand of NTN Group

Technical data

EXP216

Bearing units



Grey cast housing, radial insert ball bearing with eccentric locking collar, seal with slinger

KIT CONTENT

EX216G2, P216

VISUAL (S)

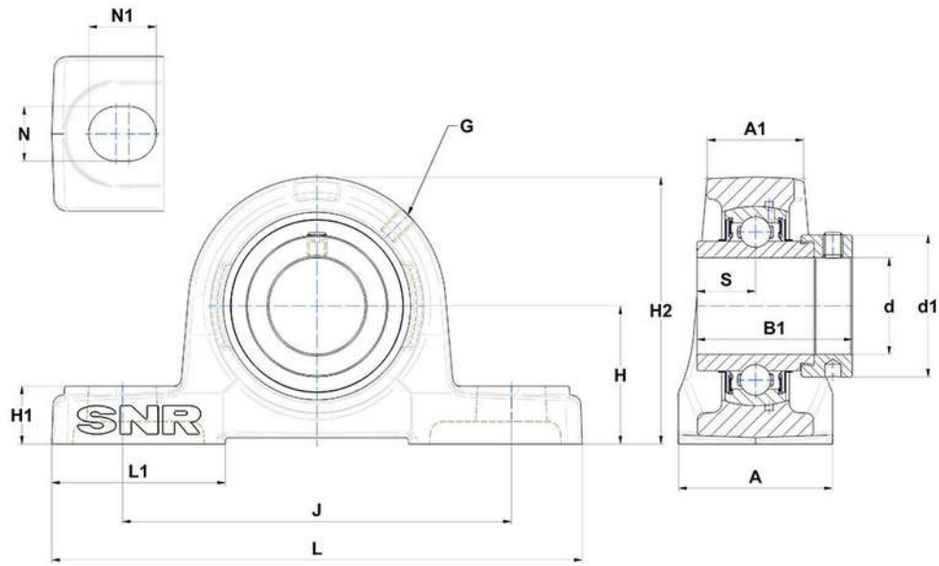

PRODUCT DEFINITION

Brand	SNR
A - Housing width	78 mm
A1 - Housing top width	51 mm
B - Width of Inner Ring	74,6 mm
d - Shaft diameter	80 mm
d1 - Outer dia of eccent. Lock. collar / nut of adapter sleeve	110 mm

NTN Europe
1 rue des Usines · BP 2017 · 74010 Annecy Cedex · France · Tel. +33 (0)4 50 65 30 00
S.A. au capital de 322 639 919 € · RCS ANNECY B 325 821 072 · Id. Fiscale : FR 48 325 821 072
SIRET 325 821 072 00015 · Code APE 2815 Z · Code NACE 28.15

PRODUCT DEFINITION	
G - Grease fitting	M10x1
H - Distance mounting base to centerline spheric. seating diam.	88,9 mm
H1 - Housing foot height	30 mm
H2 - Housing height	175 mm
J - Mounting holes distance	232 mm
L - Housing length	292 mm
L1 - Housing foot length	91 mm
N - Mounting hole dimension	25 mm
N1 - Mounting hole length	31 mm
S - Distance front side/bearing centre	37,3 mm

PRODUCT PERFORMANCE	
C - Dynamic load rating	72500000 mN
C0 - Static load rating	54200000 mN
Operating temperature min.	253,15 °K
Operating temperature max.	373,15 °K

OTHER FEATURES	
Mass	9,32 kg
Recommended tightening torque for set screw	33 N-m