Unipower®

APM382

Technical Information

Version 1.0

Overview

The Unipower APM382 is a combined Electronic Power Measurement Transducer and Load Monitor that measures power in kW on 3-phased asymmetric loads, also after frequency inverters, according to the formula:

$$P = \sqrt{3} \times U \times I \times \cos\varphi$$

*** Suitable for mains voltages from 3x230V to 3x575V**
*** Measures after frequency inverters; PWM 10Hz - 1kHz**
*** 10 Current measuring ranges up to 80A internally**
*** Digital scaling of the selected range (Zoom)**
*** Programmable filter function (analogue and digital)**

*** 2 independent alarm limits plus dP/dt (shock load) alarm**
*** Alarm inhibit inputs and external reset input**
*** Optocoupled alarm outputs**
*** 0(4)-20mA and 0(2)-10V analogue outputs**

*** Galvanic isolation between mains net and I/O (incl. 24V)**
*** Setup of parameters via PC with software 382Mon**



Features

Power measurement
The power measurement is performed by a specially developed circuit which is capable of measuring the waveform of the voltage and current signals on the output of a frequency inverter. The unit contains a 4 step programmable analogue filter and 3 digital filters which may be used to improve accuracy at frequencies down to 10Hz.

Voltage measurement
The APM382 is suitable for mains voltages from 3x230V to 3x575V. The integrated measurement system is designed for measuring after frequency inverters - i.e. between the frequency inverter and the motor. Hence the APM382 is not powered by the measuring voltage like the majority of the Unipower products, but by a 24Vdc. One of 7 mains voltage ranges is selectable from the front plate.

Current measurement
The APM382 directly measures up to 80A with internal CTs. To take advantage of the large measurement range, the unit has 10 current ranges making APM382 suitable for nominal currents below 1A and up to 80A. The current range is set by a selector switch on the front plate.

Analogue output
The APM382 features voltage and current outputs configurable as 0-20mA (0-10V) or 4-20mA (2-10V). It is not possible to generate 0-10V and 4-20mA simultaneously. 20mA (10V) is generated at nominal current, nominal voltage and cosφ=1. Selecting an invalid voltage range results in both outputs set to 0mA (0V). Both outputs may be inverted for use in a control loop.

Digital inputs
The unit is equipped with 6 digital inputs. In the standard version only S1 - S5 are used. All digital inputs are activated (On) when connected to the +12 output (23), or an external +12-24Vdc source.

Digital outputs
3 optocoupler outputs (Out1, Out2, Out3) are available for signalling alarms. They are On under normal conditions and Off during alarms. The output function may be inverted but is set common for both outputs. If an invalid voltage range is selected both outputs are set Off.

LED indicators
The APM382 has 4 LED indicators. The LED marked „Load“ indicates that the 24Vdc is connected. If the measured load is below 3% of the measurement range this LED flashes. The LED marked „Aux“ is used as indicator for the start timer (Ts) as well as a dP/dt-alarm. The LEDs marked „Limit 1“ and „Limit 2“ flash concurrently, if an invalid voltage range is selected, but otherwise indicate the status of the two limits; LED On = Tr active, LED flashing = Alarm.

Technical Specifications

Mechanical

Housing:	Lexan UL94V-0 (Top)
	Noryl UL94V-0 (Bottom)
Mounting:	M36 for 35 mm DIN rail
IP class:	Housing IP40. Terminals IP20
Terminals:	Max 16A. Max 2,5 mm^2
	Terminal tight. torque: 7lbs/in, 0.79Nm
	Use 60/75 copper (CU) wire only
Opp. Temp.:	-15 to +50 ^{O}C surrounding air
Weight:	300 g
Dimens.:	D 58 x W 102 x H 86 mm
CE mrk:	EN61326-1, EN61010-1
UL certified:	UL508, File E350194

Electrical

Supply:	24Vdc ±10%, max 150mA
Measurement voltage:	Max. 3x600V (PWM)
Current input:	Nominal 40A
Frequency:	10Hz - 1kHz
Accuracy:	Class 2%
Analogue output 1:	0(4)-20 mA max 300Ω
Analogue output 2:	0(2)-10V min load 10kΩ
Digital inputs:	12 - 24V DC
Digital outputs:	Optocoupler, max. 30V/30mA
Serial port:	RS232C, 9600 Baud

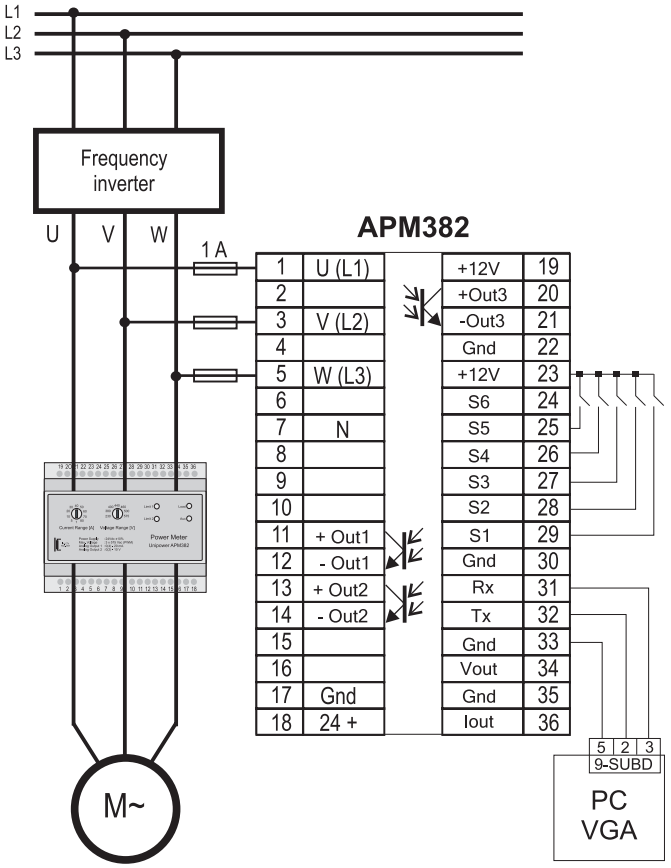

Example with frequency inverter

Installation

The APM382 is connected to the mains and load as shown in the drawing above. The example is shown where a frequency inverter is used. If this is not the case, L1, L2 and L3 are connected directly to the mains. The three motor cables are lead through the tubes mounted in the unit. Each tube is encircled by a special CT capable of measuring currents linearly up to 130A. The CTs can withstand start-up currents up to 500A. For correct measurement the live wires must be lead through the correct tube as shown in the drawing. The direction of the current is not important but must be the same for all three phases.

Measurement Range

Setting up the measurement range in the APM382 is done choosing nominal current and voltage. Based on this the power range may be calculated according to:

$$P_{Range} = \sqrt{3} * U * I$$

All setpoints are enterred in % of the measurement range and the analogue outputs are also directly proportional to it as well; 20mA (10V) corresponds to a measurement of P_{Range} kW.

Setup

All parameters in the APM382 are setup using a PC with the software 382Mon. (See users guide about how to install and use 382Mon). The basic setup of APM382 consists of the parameters:

Timer range : 100s or 1000s (2 decimals or 1)
Start timer (Ts) : 0,01 - 999,9s
Iout : 0-20mA or 4-20mA (0-10V or 2-10V)
Iout polarity : Normal or inverted
Digital filter : 3, 6 or 10s (Analogue output only)
Zoom - P1Max : 10 - 100% (Of the range)
Zoom - P1Min : 0 - 90% (Of the range)
Output polarity : Noninverted or inverted
Auto Shut Down : On or Off

Please refer to „Technical description“ on our website: www.unipower.dk for a thorough description of the parameters and their function.

Load monitor

APM382 contains two independent load monitors - each with its own dedicated output. The settings for each limit are as follows:

Limit : Off, Min or Max
Setpoint : 5 - 99 % (Of the measurement range)
Tr : 0,01 - 999,9 s
Auto Reset : On or Off
Hysteresis : 2 - 50 % (If Auto Reset is enabled)

Both limits may be set independently of each other and run completely seperately.

In addition to the two limits it is possible to activate a dP/dt supervision. This however does not have its own output, but shares Out1 with Limit 1. Setup of the dP/dt limit consists of setting the following parameters:

Limit : Off, +dP/dt or ±dP/dt
Setpoint : 2 - 99 %
dU/dt : Off, 1 - 20 % (Of nominal voltage)

For a more detailed description of the dP/dt supervision and its use, please refer to the above-mentioned technical description.

Digital Input

S1	External reset
S2	Alarm blocking (Limit 1)
S3	Alarm blocking (Limit 2)
S4	Analogue filter (figure 2)
S5	Analogue filter (figure 2)

Figure 1 Digital input

Filter

Filter	S4(26)	S5(25)
200 ms	On	On
80 ms	Off	On
40 ms	On	Off
20 ms	Off	Off

Figure 2 Analogue filter

Digital output

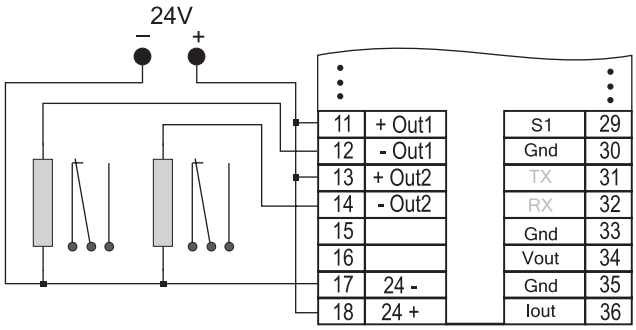

Figure 3 Ex. with digital outputs connected to external relays