Linear measuring technology

Draw-wire encoder D125	Base-Line	Measuring length max. 10 m



The draw wire system D125 is more than a sensor for determining length-related position data. Variants with integrated inclinometer and redundant interfaces offer versatile application possibilities. The contactless magnetic position scanning, a high IP67 protection level and the wider temperature range round off the product.

RoHS Analog output CANopen



Wide temperature range



High protection level


Shock / vibration resistant


Redundancy

Characteristics

- Measuring length 6 ... 10 m.
- Integrated inclinometer.
- Redundant sensors.
- Different types of sensors (analog, CANopen).
- Linearity up to ±0.5 % of the measuring range.
- High protection level IP67 and wide temperature range from -40 °C ... +85 °C.

Advantages

- The suitable measuring length for every application.
- Cost, space and installation work saving.
- For even higher plant availability.
- Simple selection and fast installation.
- High accuracy at economic prices.
- Reliability and long service life for outdoor applications.

Order code with analog sensor

D8. D125 . XXXX (a) . XXX (b) 1 (c) . 1 000

a *Measuring length*
0600 = 6 m
0700 = 7 m
0800 = 8 m
0900 = 9 m
1000 = 10 m

b *Single sensor*
A11 = 4 ... 20 mA
A22 = 0 ... 10 V
A44 = 0.5 ... 4.5 V

Redundat sensor
R11 = 2 x 4 ... 20 mA
R22 = 2 x 0 ... 10 V
R44 = 2 x 0,5 ... 4,5 V

Crossed signals
R1C = 4 ... 20 mA / 20 ... 4 mA
R2C = 0 ... 10 V / 10 ... 0 V
R4C = 0,5 ... 4,5 V / 4,5 ... 0,5 V

c *Type of connection*
1 = M12 male connector, 5-pin

Order code with CANopen and inclinometer

D8. D125 . XXXX (a) . XXX (b) 1 (c) . 1 X (d) 00

a *Measuring length*
0600 = 6 m
0700 = 7 m
0800 = 8 m
0900 = 9 m
1000 = 10 m

b *Sensor type*
RC1 = CANopen redundant
RCT = CANopen redundant, with termination resistor 120 Ω

c *Type of connection*
1 = M12 male connector, 5-pin

d *Inclinometers*
0 = none
1 = 1 inclinometer
2 = 2 inclinometers

Stock types
D8.D125.1000.RC11.1000

© Fritz Kübler GmbH, subject to errors and changes. 11/2023

Draw-wire encoder D125 | Base-Line | Measuring length max. 10 m

Cables and connectors		Order no.
Preassembled cables	M12 female connector with coupling nut, 5-pin, A coded, straight single ended 2 m [6.56'] PVC cable	**05.00.6081.2211.002M**
Connectors	M12 female connector with coupling nut, 5-pin, A coded, straight (metal)	**8.0000.5116.0000**
	M12 female connector with coupling nut, 5-pin, A coded, straight (metal/plastic)	**05.B-8151-0/9**
	M12 female connector with coupling nut, 5-pin, A coded, right-angle (plastic)	**05.B-8251-0/9**

Further Kübler cables and connectors can be found at: kuebler.com/connection-technology

Technical data

Mechanical characteristics (draw-wire mechanics)

Measuring range		6.0 ... 10.0 m
Measuring wire	material	AISI304 steel wire Nylon coated
	diameter	ø 0.9 mm
Wire fastening		eyelet
	internal diameter	ø 8 mm
	outer diameter	ø 15 mm
	height	2 mm
Speed max.		1 m/s
Acceleration max.		10 m/s²
Linearity (whole measuring range)	analog	±1.0 %
	CANopen	±0.8 %
Repetition accuracy (whole measuring range)	analog	±0.5 %
	CANopen	±0.4 %
Pull-back force		typ. 4.5 N [1]
Pull-out force		typ. 9 N
Type of connection		M12 connector, 5-pin
Housing		polycarbonate reinforced with glass fibers
Protection		IP67
Temperature range		-40 °C ... +85 °C [-40 °F ... +185 °F]
Weight		approx. 0.97 kg [34.2 oz]
Shock resistance acc. to EN 60068-2-27		300 m/s², 11 ms
Vibration resistance acc. to EN 60068-2-6		100 m/s², 10 ... 500 Hz

Electrical characteristics

Supply voltage	
Sensor type:	
A11, A22, R11, R22, R1C, R2C	12 ... 30 V DC
A44 , R44, R4C	9 ... 30 V DC
RC1, RCT	9 ... 30 V DC

Analog sensor

Output signal	analog
Resolution	12 bit

CANopen

Output signal	CANopen (DS301)
Resolution	14 bit
Resolution inclinometer	0.1°
Accuracy inclinometer	±0.6°
Temperature drift inclinometer	±0.01 % / °C

Approvals

Electromagnetic compatibility	acc. to EN 61326-1, EN 61326-3-1
CE compliant in accordance with	
EMC Directive	2014/30/EU
RoHS Directive	2011/65/EU

1) May be lower at low temperatures.

© Fritz Kübler GmbH, subject to errors and changes. 11/2023

Draw-wire encoder D125 | **Base-Line** | **Measuring length max. 10 m**

Terminal assignment

Sensor type	Interface	Type of connection	M12 connector, 5-pin					
analog sensor **A11, R11, R1C**	(2x) 4 ... 20 mA	1	Signal:	+V	0 V	Iout 1	Iout 2 [1]	n.c.
			Pin:	1	2	3	4	5

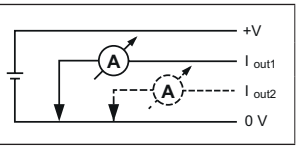

Sensor type	Interface	Type of connection	M12 connector, 5-pin					
analog sensor **A22, R22, R2C** **A44, R44, R4C**	(2x) 0 ... 10 V (2x) 0.5 ... 4.5 V	1	Signal:	+V	0 V	Uout 1	Uout 2 [1]	n.c.
			Pin:	1	2	3	4	5

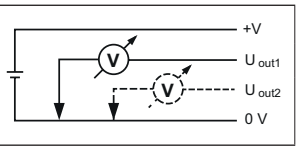

Sensor type	Interface	Type of connection	M12 connector, 5-pin					
RC1, RCT	CANopen	1	Signal:	+V	0 V	CAN-GND	CAN-H	CAN-L
			Pin:	2	3	1	4	5

+V : Supply voltage +V DC
0 V : Supply voltage GND (0V)
Iout 1 : Current output 1
Iout 2 : Current output 2
Uout 1 : Voltage output 1
Uout 2 : Voltage output 2
n.c. : not connected

Top view of mating side, male contact base

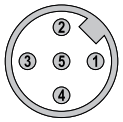

M12 connector, 5-pin

1) Only in case of redundant ordering option sensor type R11, R1C, R22, R2C, R44, R4C (otherwise n.c.).

© Fritz Kübler GmbH, subject to errors and changes. 11/2023

Draw-wire encoder D125 | **Base-Line** | **Measuring length max. 10 m**

Technology in detail

Operating principle

Construction
The core of a draw-wire device is a drum mounted on bearings, onto which a wire is wound.
Winding takes place via a spring-loaded device.

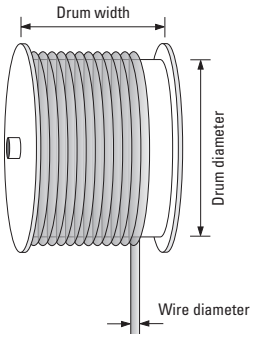

Note
Exceeding the maximum extension length of the draw-wire will lead to damage to the wire and the mechanics.

Inclinometer with option RC1

Setting possibility 360°



Setting possibility ±180°



Redundant signals possible.

Setting possibilities:
- Switching between setting possibilities 180° and 360°.
- Switching between synchronous and asynchronous output.
- Change of direction of rotation (cw/ccw).
- Setting and resetting an offset.

© Fritz Kübler GmbH, subject to errors and changes. 11/2023

Draw-wire encoder D125 | **Base-Line** | **Measuring length max. 10 m**

Dimensions

Dimensions in mm [inch]

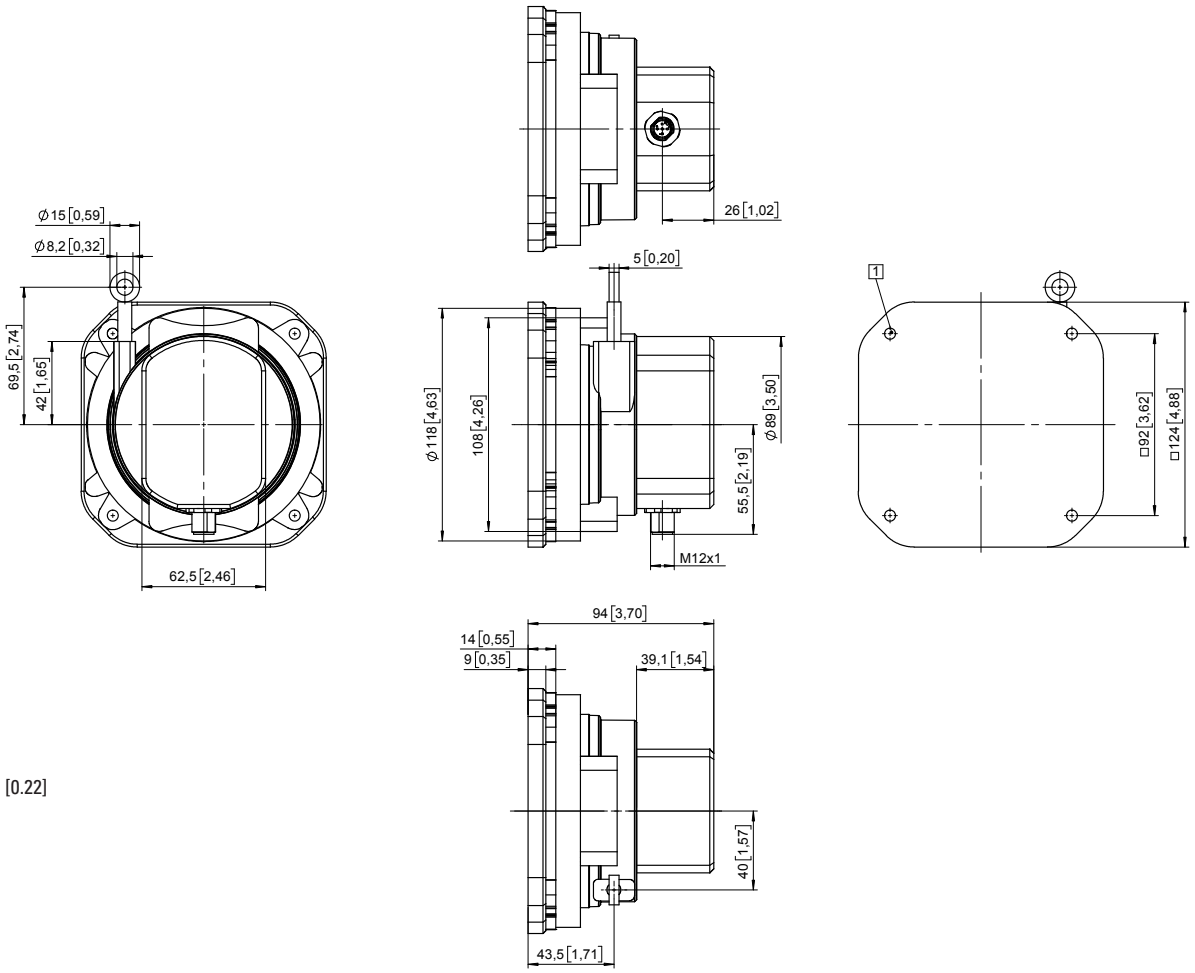

1 4 x ø 5.5 [0.22]

© Fritz Kübler GmbH, subject to errors and changes. 11/2023