SKINTOP® MS-SC

SKINTOP® MS-SC, brass cable gland with low-resistance screen contact and highly conductive, flexible EMC contact, easy to assemble





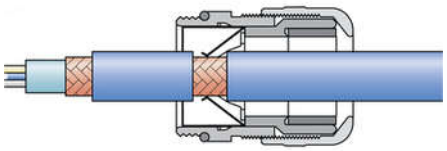

- Variety of approval certifications
- Temperature-resistant
- Interference signals
- Robust
- Optimum strain relief

Benefits

Suitable for cables with and without inner sheath
Also suitable for continuing the cable screen to another connection
Low-resistance screen contact, optimum EMC protection
Highly conductive, flexible EMC contact for clamping various screen diameters
Few operation steps, easy to assemble

Application range

For EMC-compliant earthing of the copper braiding, or for cables with copper shaft sheath
Automation technology
Telecommunication
Measurement and control technology
Industrial machinery and plant engineering

Product Make-up

PG connection thread acc. to DIN 40430

Last Update (10.11.2018)
©2018 Lapp Group - Technical changes reserved
Product Management www.lappkabel.de
You can find the current technical data in the corresponding data sheet.
PN 0456 / 02_03.16

SKINTOP® MS-SC

Note
Refer to SKINTOP® PG accessories for suitable accessories
EMC counter nut, SKINDICHT® SM nut should be used to ensure optimum contact with painted, anodised or powder-coated housings

Technical Data

Classification ETIM 5:	ETIM 5.0 Class-ID: EC000441 ETIM 5.0 Class-Description: Cable screw gland
Classification ETIM 6:	ETIM 6.0 Class-ID: EC000441 ETIM 6.0 Class-Description: Cable screw gland
Caution:	Refer to Appendix T21 for the installation dimensions and torques
Material:	Body: nickel-plated brass Insert: polyamide Sealing: CR O-ring: NBR
Protection rating:	IP 68 - 10 bar

Note
Photographs and graphics are not to scale and do not represent detailed images of the respective products.
Prices are net prices without VAT and surcharges. Sale to business customers only.

©2018 Lapp Group - Technical changes reserved

LAPP

SKINTOP® MS-SC

PRODUCT INFORMATION

Article number	Article designation / size	Thread length, D (mm)
SKINTOP® MS-SC		
53112210	PG 9	6
53112220	PG 11	6
53112230	PG 13,5	6.5
53112240	PG 16	6.5
53112250	PG 21	7
53112260	PG 29	8
53112270	PG 36	15
SKINTOP® MS-SC XL		
53112310	PG 9	12
53112320	PG 11	12
53112330	PG 13,5	12
53112340	PG 16	12
53112350	PG 21	12
53112360	PG 29	15

Last Update (10.11.2018)
©2018 Lapp Group - Technical changes reserved
Product Management www.lappkabel.de
You can find the current technical data in the corresponding data sheet.
PN 0456 / 02_03.16

SKINTOP® MS-SC

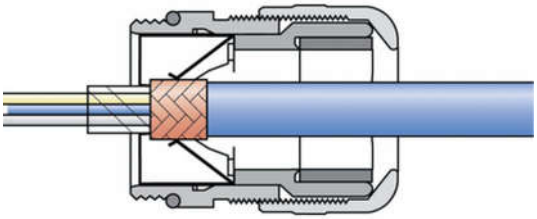

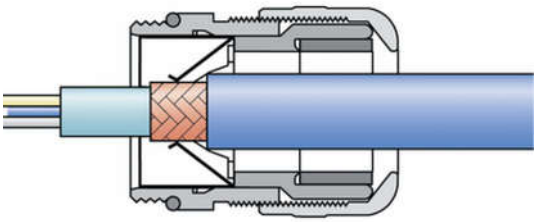

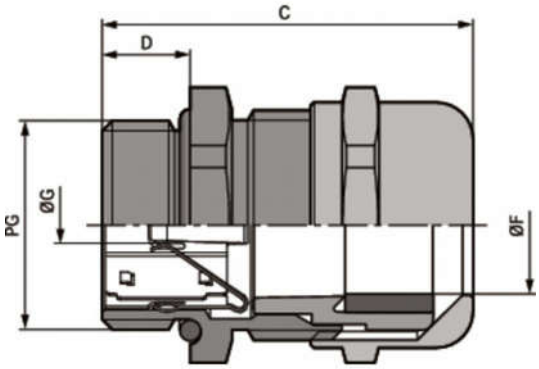

Last Update (10.11.2018)
©2018 Lapp Group - Technical changes reserved
Product Management www.lappkabel.de
You can find the current technical data in the corresponding data sheet.
PN 0456 / 02_03.16