| PARTS LIST | | | |
|---|---|---|---|
| ITEM | QTY | PART NUMBER | DESCRIPTION |
| 1 | 1 | M5601033 | Base/Chassis Assembly |
| 2 | 1 | M5601067 | Top Cover |
| 3 | 1 | M5602012 | Rear Panel |
| 4 | 2 | M5605004 | Front/Rear Bezel |
| 5 | 8 | M5700202 | Rack Card Guide |
| 6 | 4 | M3 x 8 mm Pan Screw | Rear Panel Screws |
| 7 | 8 | M4 x 10 mm CSK | Bezel Fixing Screws |

Base

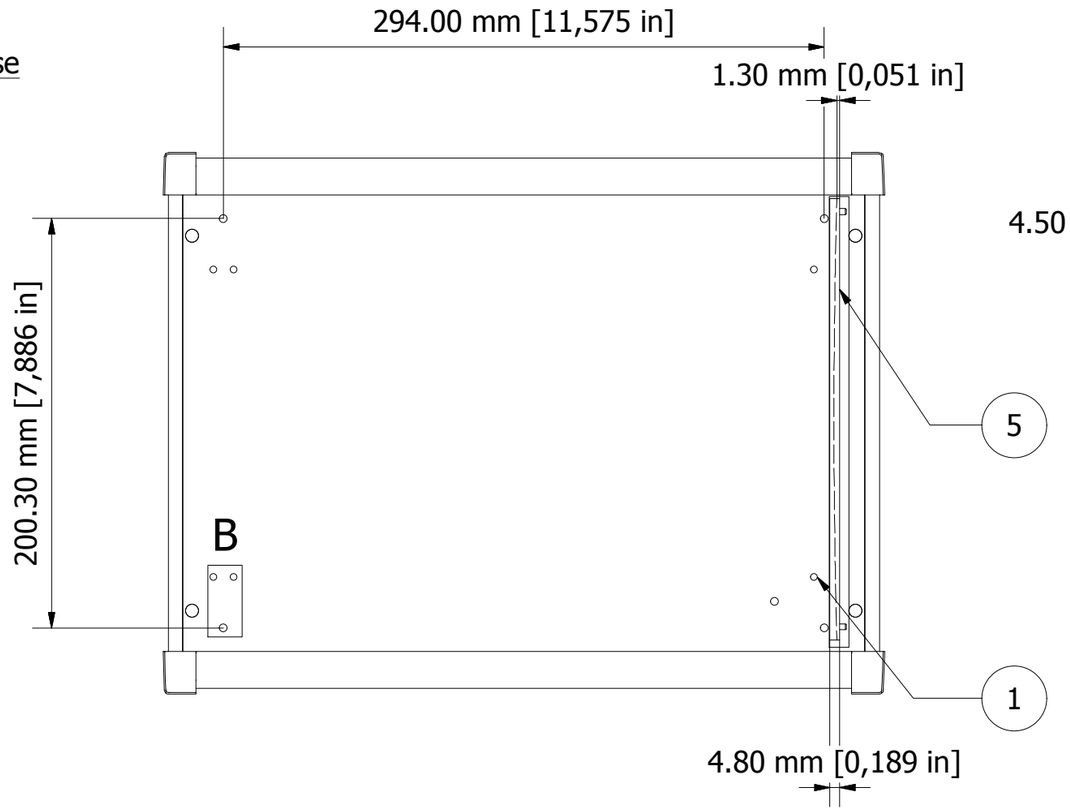


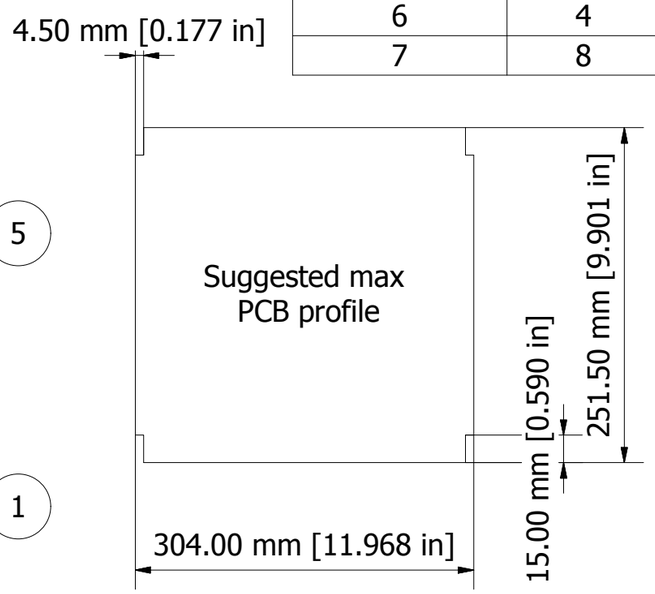


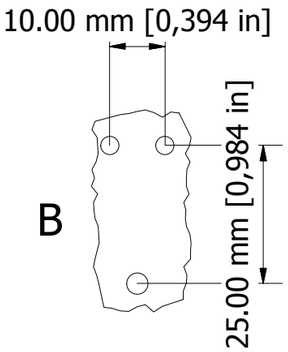


Foot hole detail:
2 holes Ø3.3 mm [0.13 in] & 1 hole Ø 3.8 mm [0.15 in]

Front

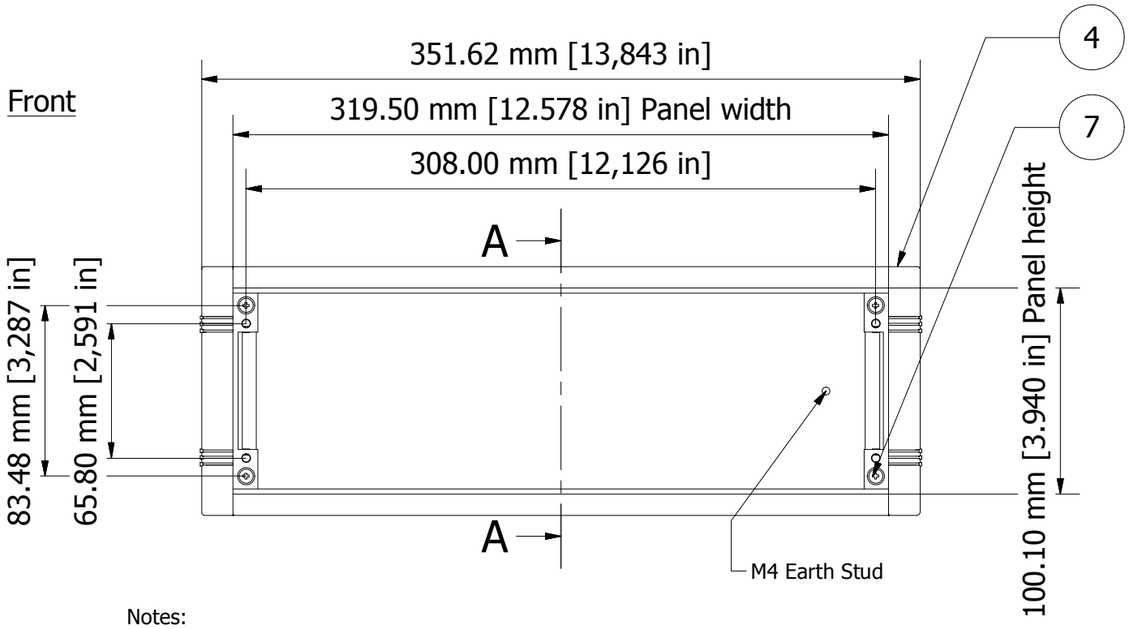


Side

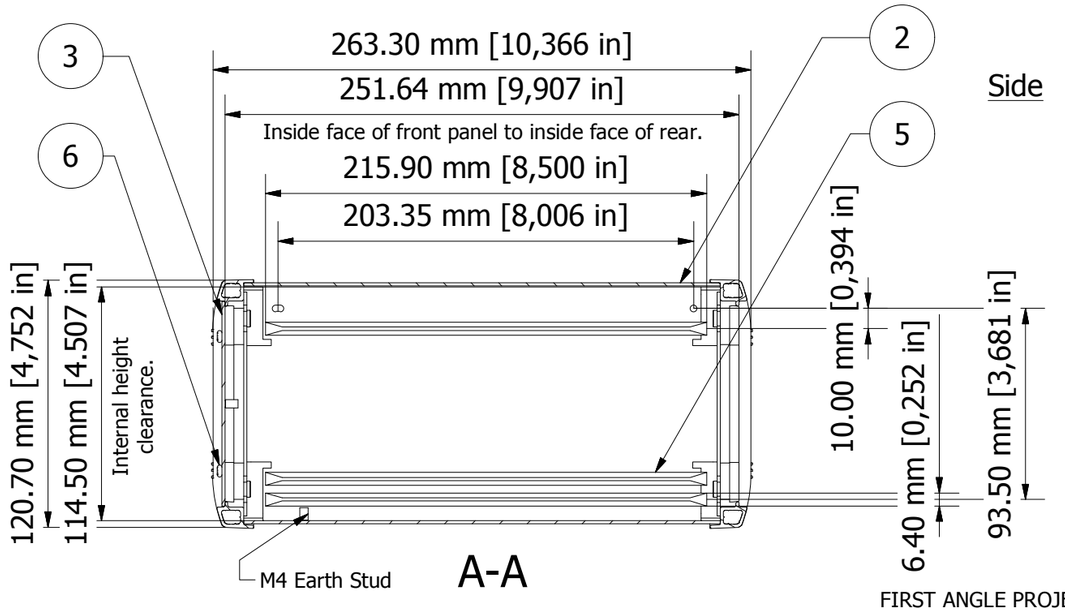


FIRST ANGLE PROJECTION

Notes:
1) Case is fabricated from 1.5 mm aluminium sheet with die cast & extrusion bezels.
2) Case is powder coat painted fine texture with RAL 7040 bezels and RAL 7035 panelwork.
3) Cover, base and rear panel all have M4 x 8 mm studs for earthing points.
4) Case supplied with 4 off plastic card guides - M5700203.

© OKW Enclosures Ltd (Date as shown). This drawing contains proprietary information of OKW Enclosures Ltd and is tendered subject to the following conditions. The information be retained in confidence, not be reproduced or copied, and not be used or incorporated in any product, unless permission is obtained in writing from OKW Enclosures Ltd.

| Designed by | Description | Date | Scale |
|---|---|---|---|
| L Clark | Unimet-Plus 4 | 25/04/2012 | 1:3 |

METCASE ENCLOSURES
15 Brunel Way, Segensworth East, Fareham, Hampshire, UK. PO15 5TX
Tel: +44 (0)1489 583858 Email: metcase@okw.co.uk

METCase™ www.metcase.com

| Part Number | Issue | Sheet |
|---|---|---|
| M5635215 | 1 | 1 / 1 |