THERMOMETRICS
A COMMITMENT TO EXCELLENCE

Inline Flow-Through Fluid Temperature Sensor



Thermometrics Inline Flow-Through Temperature Sensor monitors the temperature of a fluid that passes through it. A system control module receives this temperature reading and uses a control loop to control the overall system temperature. This could be engine temperature, heater temperature, industrial supply temperature, etc.

Applications

- Engine Coolant Temperature
- Battery Pack Coolant Line Temperature
- Process Flow Management
- HVAC Water Management
- Home Appliances

Features

- High sensitivity
- Wide application range
- Compact design
- SAE J-1231 interface
- USCAR sealed connection system
- Available in four standard hose sizes







Amphenol

Advanced Sensors

Inline Flow-Through Fluid Temperature Sensor Specifications

Operating Temperature
-40°C to 120°C (-40°F to 248°F)

Storage Temperature
-40°C to 120°C (-40°F to 248°F)

R @ 77°F (25°C)
10 KΩ ± 1.5%

Beta (25/85)°C
GE-2102: 3977K
GE-1935: 3977K
GE-2103: 3977K
CTTS-302651-F01: 3435K

Housing Material
Polyamide 6/6
Color: Black

Mating Connector
Molex 31403-2100 without CPA Lock
Molex 31403-2110 with CPA Lock

Thermistor Material System
Material 1

Mechanical

Part Number	Hose Size	SAE J1231 Hose Dash Size	Weight
GE-2102	0.50 in (12.70 mm)	-8	~8g
GE-1935	0.75 in (19.05 mm)	-12	~14g
GE-2103	1.25 in (31.75 mm)	-20	~26g
CTTS-302651-F01	0.55 in (14.00 mm)	-14	~10.1g

GE Series RvT Table

Temp. (°C)	Resistance (Ω)	Resistance Tolerance (± %)	Temp. Tolerance (±°C)
-40	332776	5.95	0.5
-20	96481	4.24	0.5
0	32566	2.71	0.4
20	12486	1.72	0.4
25	10000	1.50	0.3
40	5331	2.11	0.5
60	2490	2.84	0.6
85	1071	3.58	0.8
100	678.1	5.56	1.0
120	338.2	7.00	1.2

CTTS RvT Table

Temp. (°C)	Resistance (Ω)	Resistance Tolerance (± %)	Temp. Tolerance (±°C)
-40	209587	4.6	0.8
-20	71203	3.5	0.7
0	27758	2.5	0.6
20	12116	1.7	0.4
25	10000	1.5	0.4
40	5807	2.1	0.6
60	3009	2.7	0.9
85	1450	3.5	1.3
100	968.4	3.9	1.5
120	579.8	4.4	1.8

Typical Application



Typical Circuit Diagram

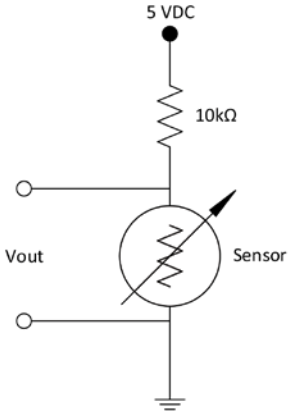

Inline Flow-Through Fluid Temperature Sensor Dimensions (mm/in)

GE-2102
-8, 1/2” Hose

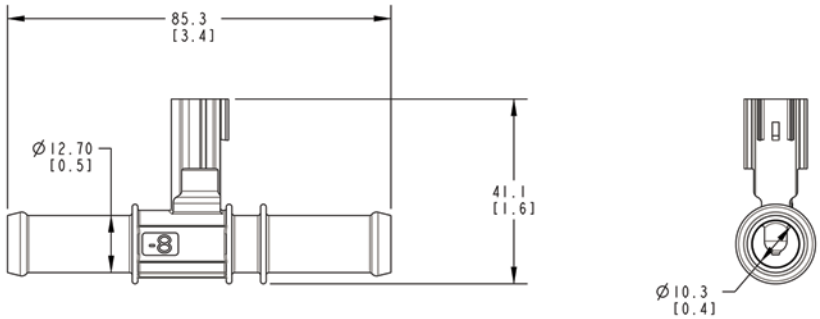

GE-1935
-12, 3/4” Hose

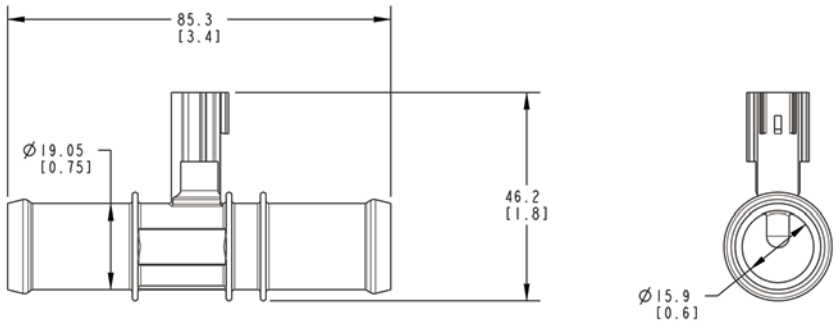

GE-2103
-20, 1-1/4” Hose

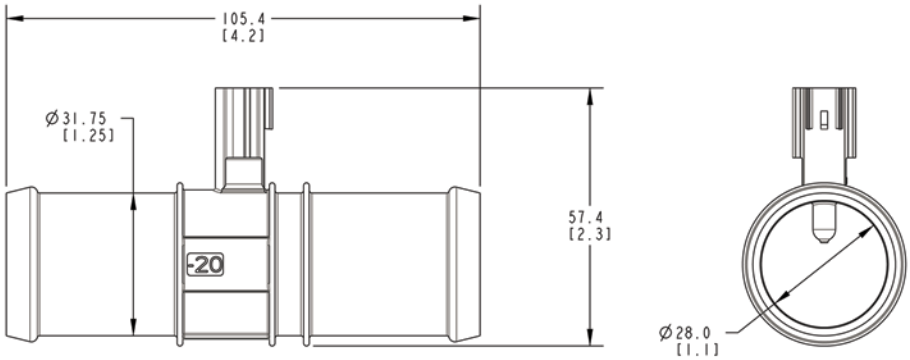

CTTS-30265-F01
-14, .55” Hose

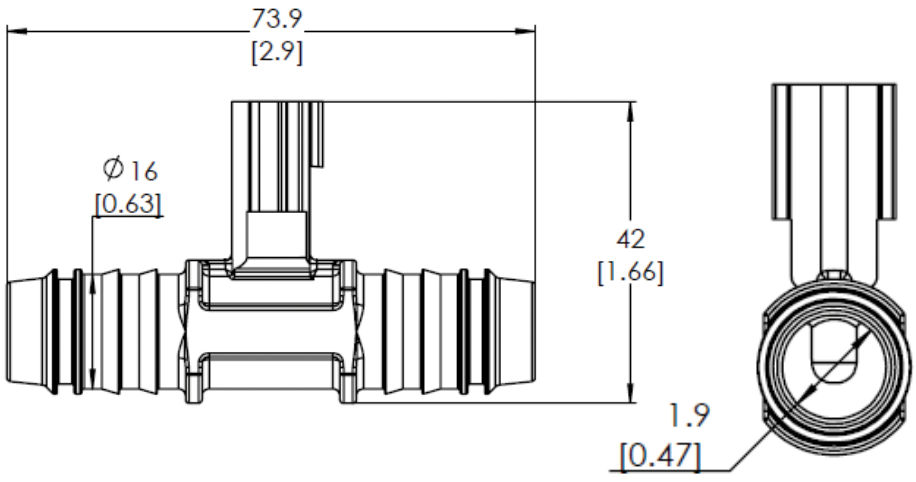

Dimensions shown are for envelope size. Contact Product Engineering for detailed drawings.

Amphenol

Advanced Sensors

www.amphenol-sensors.com

© 2020 Amphenol Corporation. All Rights Reserved. Specifications are subject to change without notice.

AAS-920-657E - 08/2020