GEFRAN

PS

ROTATIVE POSITION TRANSDUCERS
IN CONDUCTIVE PLASTIC



Main features

- *Models 09, 11, 20*
- *Servo mounting*
- *Independent linearity up to ± 0,05% (standard ± 0,5%)*
- *Repetibility 0,01% C.E.T.*
- *Rotation speed ≤ 600 r.p.m. (within C.E.U.)*
- *Life duration: >100x10⁶ operations at 10 r.p.s.*
- *Infinite resolution*
- *Electrical terminals: turrets*
- *Grade of protection IP40*

TECHNICAL DATA

Model	09 - 11 - 20
Vibrations	5...2000Hz, Amax =0,75 mm amax. = 20 g
Shock	50 g, 11ms.
Electrical terminals	Gold plated turrets
Torque	<= 0,20Ncm
Rotation speed	<= 600 giri/min. (within C.E.U.)
Life duration (within C.E.U.)	>100x10⁶ operations
Tolerance on resistance total	± 20% other values by request
Recommended cursor current	< 0,1 mA
Maximum cursor current	10mA
Electrical isolation	>100MΩ a 500V=, 1bar, 2s
Dielectric strength	< 100 mA a 500V~, 50Hz, 2s, 1bar
Dissipation at 40°C (0W at 120°C)	see table
Actual Temperature Coefficient of the output voltage	< 1,5ppm/°C
Working temperature	-55...+100°C
Storage temperature	-55...+125°C
Case material	Diallylphtalate
Shaft material	AISI 316
Bearings	High precision with double (ZZ) sealed screen in stainless steel
Flange	Anodised aluminium

MECHANICAL DIMENSIONS

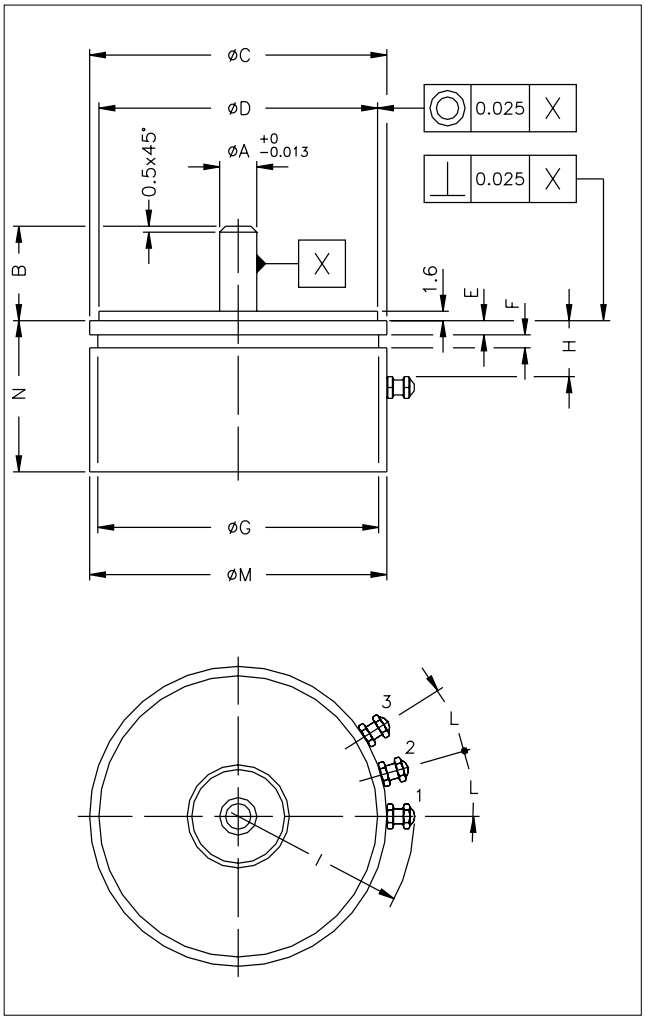

Important: all the data reported in the catalogue linearity, lifetime, temperature coefficient are valid for a sensor utilization as a ratiometric device with a max current across the cursor Ic ≤ 0.1 mA.

MECHANICAL / ELECTRICAL DATA

MODEL		PS09	PS11	PS20
Theoretical electrical stroke (C.E.T.)	°	340 ± 4°	345 ± 4°	350 ± 4°
Useful electrical stroke (C.E.U.)	°	C.E.T. -2°		
Resistance ± 20% (C.E.T.)	kΩ	1 - 4.7 - 10		
Independent linearity (within C.E.U.)	±%	A = ± 1% B = ± 0,5% C = ± 0,25% D = ± 0,1% E = ± 0,05%		
Dissipation at 40°C (0W at 120°C)	W	1	1,25	3
Mechanical rotation	°	360° continuous		
Weight	g	16	20	90

ELECTRICAL CONNECTIONS

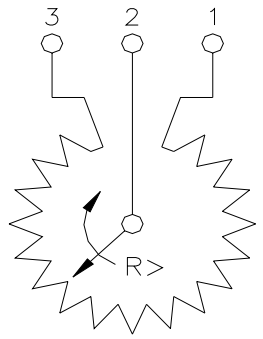

Clockwise viewed from shaft side

DIMENSIONS

DIMENSIONS (mm)	DESCRIPTION	SIZE/MODEL 09 / PS09	SIZE/MODEL 11 / PS11	SIZE/MODEL 20 / PS20
ø A + 0/0.013	ø Stainless steel shaft	3.175	3.175	6.35
B max.	Shaft length	16	16	16
ø C max.	External ø of flange	22.25	27.05	50.8
ø D	ø flange Tolerance on flange	19.05 +0 -0.013	24.608 +0 -0.013	47.625 +0 -0.025
E	Shoulder	1.6	1.6	2.4
F min.	Width of groove	1.5	1.5	2.2
ø G max.	Diameter of groove	20	25	48
H min.	Locating turrets	6	6	10
I max.	Radius on turrets	16	18	30
L ± 2°	Angle between turrets	30°	25°	15°
M max.	External ø of case	22.2	27	50.8
N max.	Length for Nr. of elements = 1	21	21	24

MOUNTING DIAGRAM

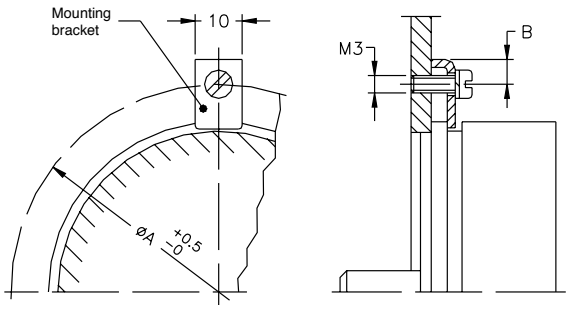

MODEL	PS09	PS11	PS20
ø A + 0,5/-0	29	34	62
B	4,3	4,3	3,5

INCLUDED ACCESSORIES

	Code
Fixing kit for PS: 3 brackets, M3x8TC screws, grower	
Rotative transducers PS09 - PS11	**PKIT012**
Rotative transducers PS20	**PKIT013**

ORDER OCODE

Rotative transducer PS ☐ ☐ **0** ☐ ☐

Model

Linearity (std. B)	**A = ± 1%**
	B = ± 0,5%
	C = ± 0,25%
	D = ± 0,1%
	E = ± 0,05%

Resistance value (std.103)	**1kΩ**	**102**
	4,7kΩ	**472**
	10kΩ	**103**

If requested, it is possible to supply models with non-standard mechanical and/or electrical features

Example:**PS20 - B - 0 - 103**
Rotative transducer model PS20, 1 resistive element, linearity ± 0,5%, no voltage or current intermediate pick-offs, 10kΩ resistance.

GEFRAN spa reserves the right to make any kind of design or functional modification at any moment without prior notice

via Sebina, 74
25050 PROVAGLIO
D'ISEO (BS) - ITALIA
ph. 0309888.1 - fax. 0309839063
Internet: http://www.gefran.com

GEFRAN