# Panel Frames
## for Hengstler Modular System 400



Size 1

Attachment by two countersunk screws M4

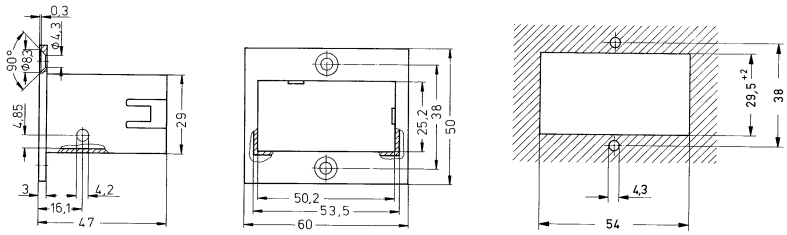


Plastic, black Ordering code 1 405 491
Plastic, grey Ordering code 1 405 452 Dimensions in mm



Size 2

Attachment by set screws

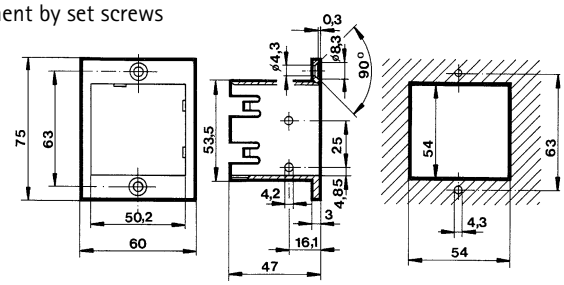


Plastic, black Ordering code 1 405 492
Plastic, grey Ordering code 1 405 453 Dimensions in mm



Size 3

Attachment by set screws

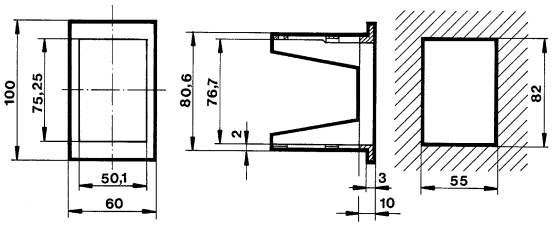


Die-cast
Textured paint, matt black Ordering code 1 405 010
silver Ordering code 1 405 009 Dimensions in mm



Size 4

Attachment by set screws

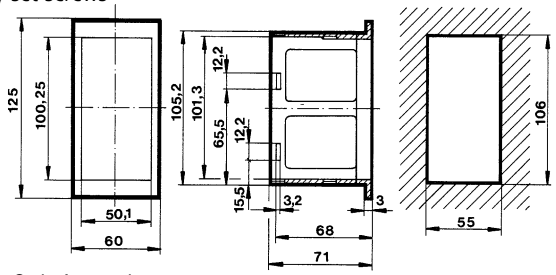


Sheet steel Ordering code 1 405 093
Textured paint, matt black Dimensions in mm

Accessories

# Panel Frames
## for Hengstler Modular System 400



Size 5

Attachment
by set screws

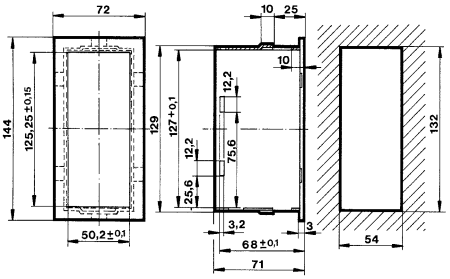


Die-cast
Textured paint, matt black  Ordering code 1 405 493  Dimensions in mm

## Panel Frames "signo" + "tico"



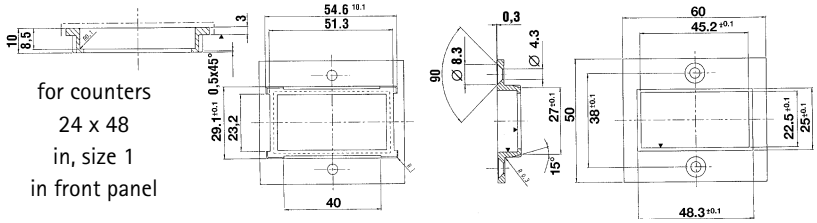


for counters
24 x 48
in, size 1
in front panel

Ordering code 1 405 692  Dimensions in mm



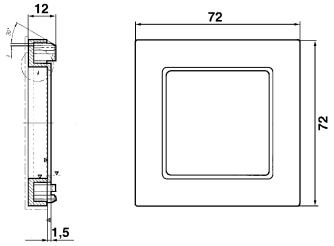


for counters
48 x 48
in DIN cutout
68 x 68

Ordering code 1 405 676  Dimensions in mm



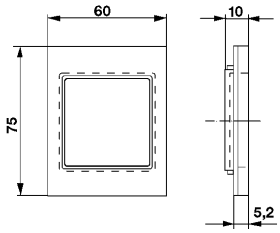


for counters
48 x 48
in, size 2
front panel

Ordering code 1 405 675  Dimensions in mm



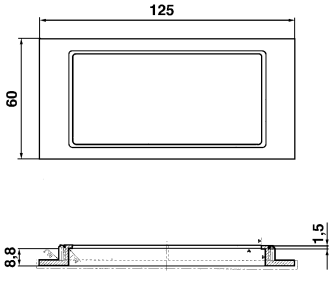


for counters
48 x 96
in, size 4
front panel

Ordering code 1 405 679  Dimensions in mm

# Panel Frames
## for Hengstler Modular System 400



2 counters
24 x 48 mm
in
front panel size 2

Order-Nr. 1 405 696

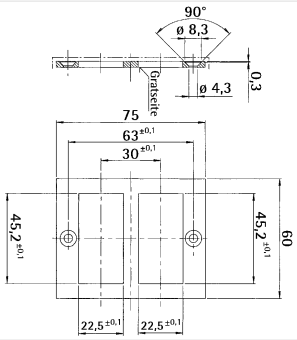




1 counter 24 x 48 mm
1 counter 48 x 48 mm
in
front panel size 3

Order-Nr. 1 405 693

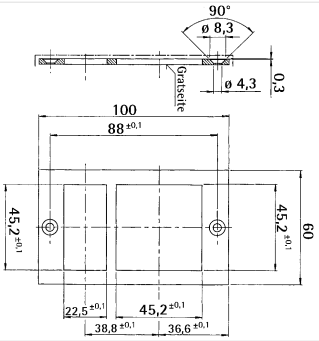


# Dummy Caps





- For filling a prepared counter cutout

**DIMENSIONED DRAWING SIZE 1**
**Dummy cap with attachment socket**

**DIMENSIONED DRAWING SIZE 2**
**Dummy cap with attachment socket**

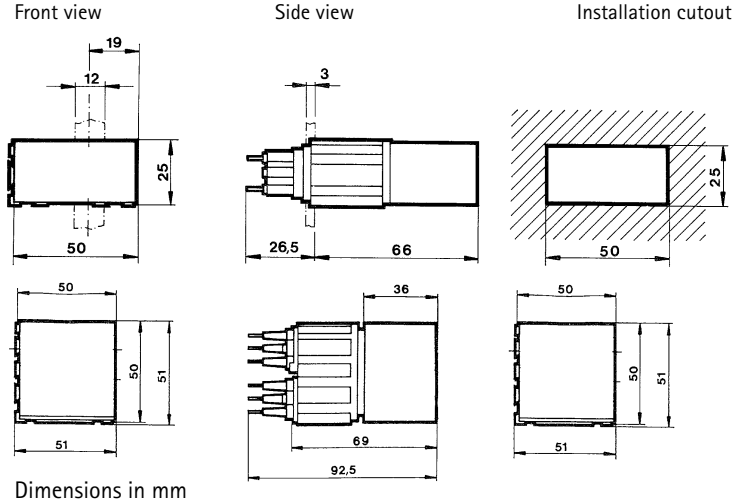


Dimensions in mm

**ORDER INFORMATION**

| | |
|---|---|
| Dummy cap size 1 | Ordering code 2 651 009 |
| Dummy cap size 2 | Ordering code 1 651 018 |

# Protective Cases
## with Screw Terminal Connection

Size 1




Dimensioned drawing for snap-on attachment

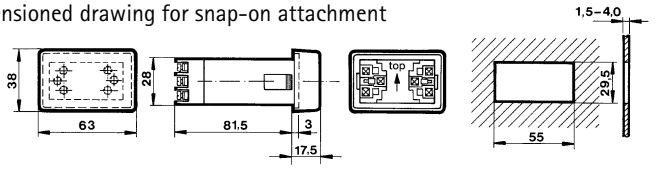


Colour: light grey Ordering code 1 405 588 Spare cover Ordering code 2 405 191*
Colour: black Ordering code 1 405 641 Dimensions in mm

Size 2

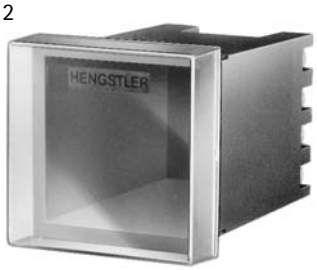


Dimensioned drawing for snap-on attachment

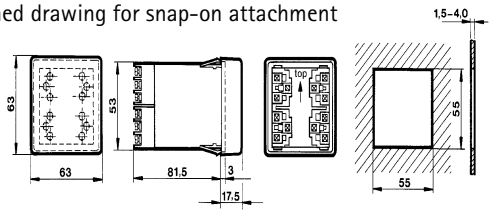


Colour: light grey Ordering code 1 405 666 Spare cover Ordering code 2 405 192*
Colour: black Ordering code 1 405 668 Dimensions in mm

Size 1

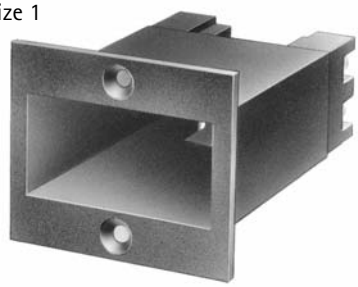

Dimensioned drawing for screw attachment

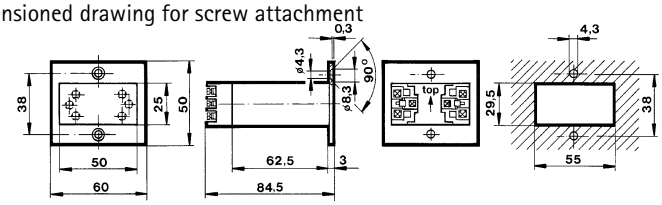


Colour: light grey Ordering code 1 405 562
Colour: black Ordering code 1 405 640 Dimensions in mm

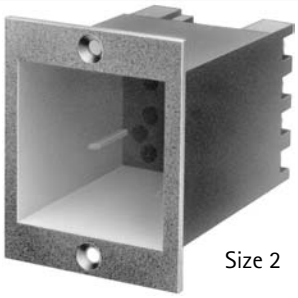

Size 2

Dimens. drawing for screw attachment

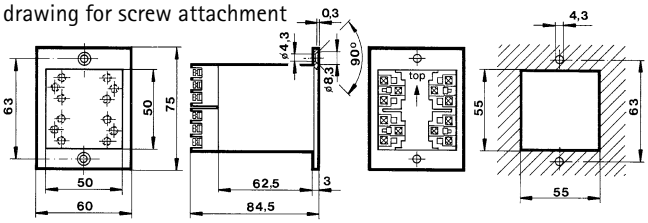


Colour: light grey Ordering code 1 405 667
Colour: black Ordering code 1 405 669 Dimensions in mm

* On request

### TECHNICAL DATA

| | |
|---|---|
| Case | fibreglass-reinforced plastic |
| Transparent cover | see "Accessories - transparent covers" |
| Mounting | screw or snap-on attachment, dep. on version |
| Connection | screw terminals on the rear of the case |
| Protection class (IEC 144) | - screw-mounted case IP 00,<br>with mounted transparent cover: front IP 65, connections IP 00<br>- case with snap-on attachment: front IP 52, connections IP 00 |

# Sealing Covers • Transparent Covers
## with Protection to IP 65



Size 1

Flexible Vestolit sealing cover with metal frame for panel frames or protective cases size 1-2.
The sealing set enables you to operate a counter through the cover.

Size 1
for screwed front panel 60 x 50 mm Ordering code 1 405 615, silver colour

Size 2
for screwed front panel 60 x 75 mm
Ordering code 1 405 404, silver colour
Ordering code 1 405 587, black

Parts supplied:
Sealing set including metal frame, cover and retaining screws.



Size 2



Size 1

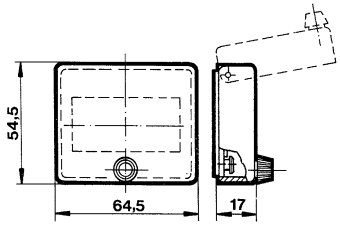


Size 1
for screwed front panel 60 x 50 mm
with knob Ordering code 1 405 611
with key lock Ordering code 1 405 612



Size 2

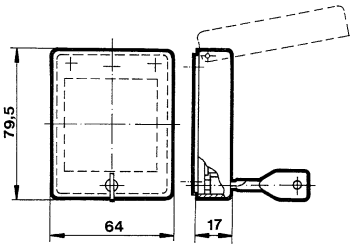


Size 2
for screwed front panel 60 x 75 mm
with knob Ordering code 1 405 613
with key lock Ordering code 1 405 614

Transparent covers together with the fitting panel frame or protective case offer protection against dust and water from the front for switch-panel incorporation.

Protection class IP 65 acc. to DIN 40 050.
Transparent covers are made of makrolon, seals are made of synthetic rubber.

Parts supplied:
Transparent covers including seals.
1 key per unit for versions with lock.

# Type 680

# Case for Surface Mounting and DIN Rail Attachment




- Attachment by means of 35 mm DIN rail or with screws
- Case made of insulating material
- Installation of counters of the modular system 400 in protective case size 2

## TECHNICAL DATA

| | |
|---|---|
| Case | ABS plastic |
| Colour | grey |
| Resistance to heat | up to 85 °C |
| Burning properties | VDE 0304 part 3/5.70, degree IIIa |
| Mounting | - snap-on attachment to 35 mm DIN rail (DIN 46277/DIN EN 5022), lengthwise or crosswise<br>- screw-mounting 2 x M4 or M5 |
| Connection | by cable, cable inlet with PG-cable gland or feed-through |

## DIMENSIONED DRAWING

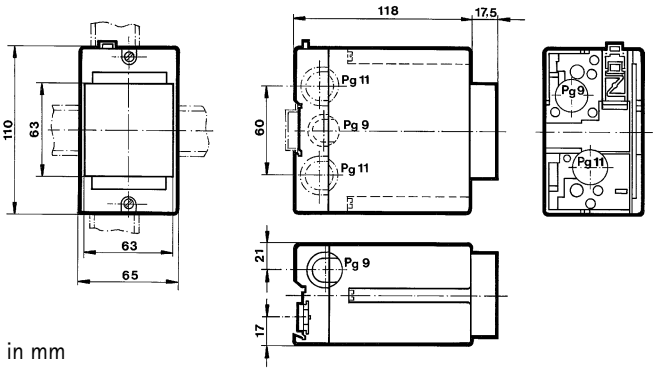


Dimensions in mm

## ORDER INFORMATION

| | |
|---|---|
| Case (without counters) | Ordering code 1 680 089 |

Delivery includes case compl. with protective case size 2 (12-way connectors) without counters.

# Measuring Wheels

## APPLICATION

In order to avoid errors when using measuring wheel actuation, it is important that the slip is kept as low as possible. When choosing a profile (surface structure), special attention must be given to the properties the material being measured, such as elasticity, thickness and interaction resistance. Slippage is also influenced by the width of the contacting measuring wheel, the pressure of contact, the tensile stress in the material that is being measured and the angle of wrap. The angle of wrap should be as large as possible. Wheel bodies are made of cast metal or plastics (see designation).
The position of the measuring wheel should be chosen such that the material moves away from the bearing of the sensor.

## CORRECT MEASURING WHEEL OR PULSE GENERATOR

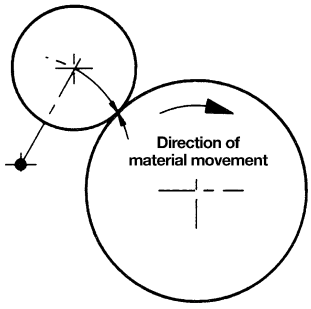


## WRONG MEASURING WHEEL OR PULSE GENERATOR

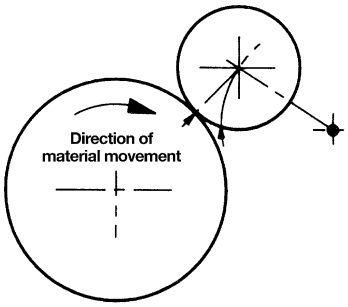


## MEASURING WHEEL CIRCUMFERENCE/ TRANSMISSION RATIO

Use the following measuring wheels for different transmission ratios of counters:

| Counter transmission ratio | measuring wheel circumference |
|---|---|
| 500:1 | 0.2 m (1/5 yd.) |
| 50:1 | 0.2 m (1/5 yd.) |
| 5:1 | 0.2 m (1/5 yd.) |
| 2:1 | 0.5 m (1/2 yd.) |
| 1:2 | 0.2 m (1/5 yd.) |
| 1:5 | 0.5 m (1/2 yd.) |
| 1:20 | 0.2 m (1/5 yd.) |

# Measuring Wheels

## OVERVIEW

Profile 1

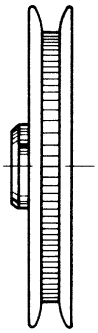

**1** with rims, aluminium with fine cross knurling
Used e.g. for threads and yarns

Profile 2

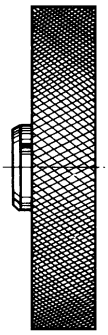

**2** Rubber profile, glued on
Used e.g. for paper and cardboard, cable measurement, non-greasy metal, fleece, wood (rough or finished), soft and hard plastic materials;
A = soft, highly adhesive rubber coating
B = good-grip, low-wear rubber

Profile 3/4

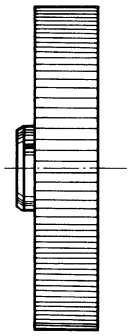

**3** Rubber coating with parallel knurling, vulcanized
Used e.G for rubber, leather. textiles, floorings, glass

**4** Aluminium with parallel knurling
Used e.g. for rubber, soft plastic materials, wood with rough surface, certain textiles

Profile 5

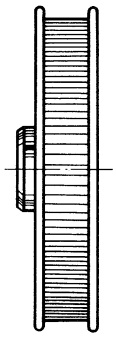

**5** With rims, aluminium with parallel knurling
Used e.g. for threads, yarns, ribbons

## MEASURING WHEEL
**circumference/transmission ratio**

Profile 6

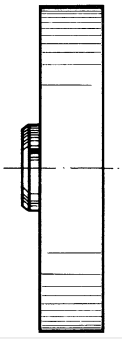

**6** Plastic coated
Used e.g. for wire, greased metals, steel profiles

Profile 7

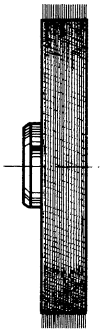

**7** Card band
Used e.g. for carpets and coarse textiles

# Technical data

## ORDER INFORMATION
### Aluminium

| Circumf. | Profile | Width of contact surf. mm | Bore ∅ 4.0 mm | 6.0 mm | 7.0 mm | 10.0 mm |
|---|---|---|---|---|---|---|
| 0.2 m | 1 | 4 | 0 601 014 | 0 601 015 | 0 601 017 | –– |
| | 2 A | 12 | 0 601 018 | –– | –– | –– |
| | 2 B | 12 | 0 601 118 | 0 601 048 | –– | 0 601 049 |
| | 2 A | 24 | 0 601 020 | –– | 0 601 092 | –– |
| | 2 B | 24 | | –– | 0 601 192 | –– |
| | 4 | 20,5 | 0 601 023 | –– | | |
| | 4 | 20 | –– | | 0 601 093 | –– |
| | 5 | 16,5 | 0 601 026 | –– | 0 601 094 | –– |
| 0.5 m | 2 A | 25 | –– | –– | 0 601 050 | –– |
| | 2 B | | | | 0 601 150 | 0 601 151 |
| | 3 | 25 | –– | –– | 0 601 059 | 0 601 156 |
| | 4 | 25 | –– | –– | 0 601 121* | 0 601 157 |
| | 5 | 16 | –– | –– | 0 601 052 | –– |
| | 6 | 25 | –– | –– | 0 601 063* | 0 601 163 |
| | 7 | 26,5 | –– | –– | –– | –– |
| 1/5 yd. | 1 | 4 | 0 601 034 | –– | 0 601 037 | –– |
| | 5 | 16,5 | –– | –– | 0 601 096 | –– |
| 1 Fuß | 2 A | 25 | –– | –– | 0 601 071 | –– |
| | 2 B | 25 | –– | –– | 0 601 171 | –– |

## PLASTIC

| | | | | | | |
|---|---|---|---|---|---|---|
| 0.2 m | 1 | 4 | 0 601 100 | –– | –– | –– |
| 0.5 m | 4 | 25 | | | 0 601 301 | –– |
| | 6 | 25 | –– | –– | 0 601 300 | –– |

* meets PTB requirements

Inquire for other measuring wheels

# Stroke Levers

## OVERVIEW

This overview shows different kinds of levers available. The stroke levers are not supplied with the counters and must be ordered separately.

A "standard lever" is stated with the order information for mechanical stroke counters.

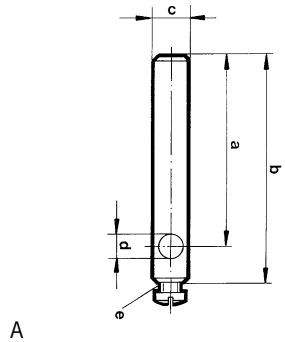


A

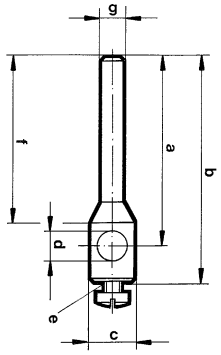


B

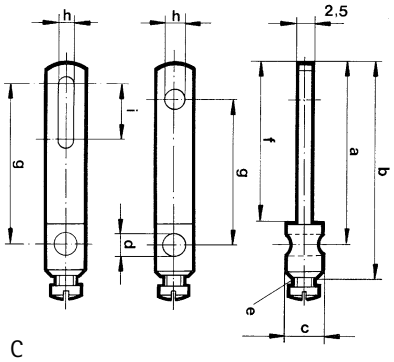


C

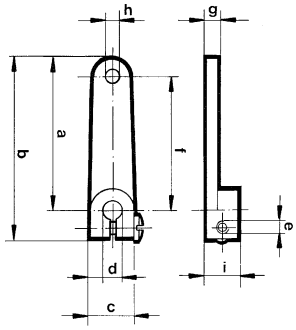


D

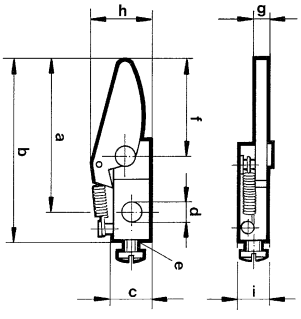


E

# Stroke Levers

## Technical data

### DIMENSION TABLE

| Ordering code | a | b | c | d | e | f | g | h | i |
|---|---|---|---|---|---|---|---|---|---|
| 0 600 003 | 34 | 40.5 | ∅ 8 | ∅ 5 | M 3 | 29.5 | ∅ 4 | -- | -- |
| 0 600 005 | 45 | 55 | ∅ 10 | ∅ 7 | M 4 | 41 | ∅ 5 | -- | -- |
| 0 600 007 | 26 | 31.5 | ∅ 7 | ∅ 3 | M 2.6 | 21.2 | -- | -- | -- |
| 0 600 009 | 22 | 28 | ∅ 7 | ∅ 4 | M 4 | 18 | 18 | 3 | 11 |
| 0 600 010 | 28.7 | 33.7 | 8 | ∅ 3 | M 2.6 | 25.4 | 1.8 | 2.5 | 5.5 |
| 0 600 012 | 28.2 | 33.5 | 7 | ∅ 3 | M 2.6 | 17.8 | 2 | 10.7 | 5 |
| 0 600 013 | 28.2 | 33.5 | 7 | ∅ 4 | M 4 | 17.8 | 2 | 10.7 | 5 |
| 0 600 026 | 35.5 | 41.5 | ∅ 7 | ∅ 4 | M 4 | 31.5 | ∅ 3.5 | -- | -- |
| 0 600 047 | 27.5 | 35 | 7 | ∅ 4 | M 3 | 24 | 2.5 | 2 | 6 |
| 0 600 061 | 22 | 28 | ∅ 7 | ∅ 4 | M 4 | 18 | 15 | 3 | -- |
| 0 600 090 | 33 | 39.5 | ∅ 8 | ∅ 5.5 | M 4 | 28.5 | ∅ 4 | -- | -- |
| 0 600 126 | 35 | 41.5 | ∅ 6 | ∅ 4 | M 4 | -- | -- | -- | -- |

### ORDER INFORMATION

| Bore ∅ mm | Shape A | B | C | D | E |
|---|---|---|---|---|---|
| 3 | -- | -- | 0 600 007 | 0 600 010 | 0 600 012 |
| 4 | 0 600 126 | 0 600 026 | 0 600 009* | 0 600 047* | 0 600 013 |
| 4 | -- | -- | 0 600 061* | -- | -- |
| 5 | -- | 0 600 003 | -- | -- | -- |
| 5.5 | -- | 0 600 090 | -- | -- | -- |
| 7 | -- | 0 600 005 | -- | -- | -- |

* on request
Inquire for other stroke levers

# Spark Quenching

Loads operated directly by the counter, such as contactors, solenoids etc., produce a very high inductive voltage when they are switched off.
This leads to sparking at the switch contacts and causes contact burning, thus reducing the lifetime or the integrated relay. Voltage peaks may also cause interfering pulses.

Therefore we recommend to adopt one of the following spark quenching measures for inductive loads.

### RC UNIT
**For contactors, solenoids etc.**

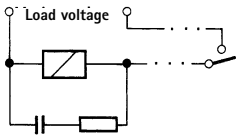


### VARISTOR
**For small relays**

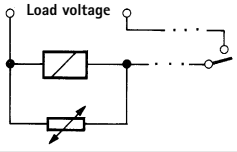


### ORDER INFORMATION

| | |
|---|---|
| RC unit | Ordering code 3 536 801 |
| Varistor | Ordering code 3 540 777 |

# Mounting Frame




This mounting frame is designed for the installation of mechanical counters type 225 and 250.
The mounting frame is attached by means of four countersunk screws (supplied with the frame). The counter can easily be installed once the frame is in place. Slide the counter into the mounting frame and fasten to the baseplate from below.

## DIMENSIONED DRAWING

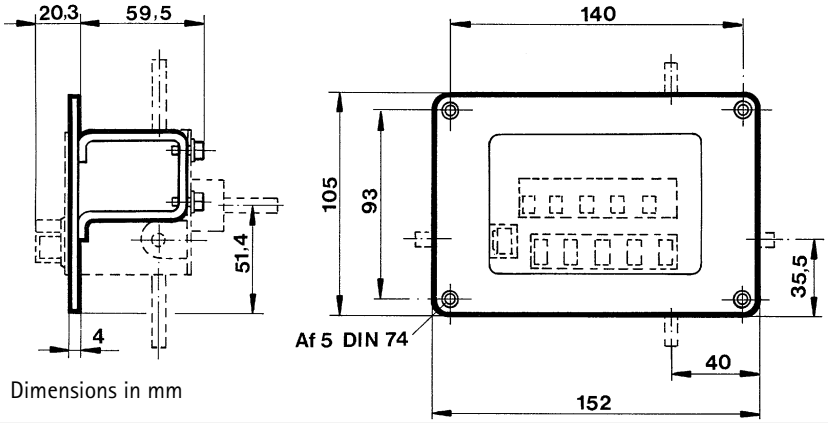


Dimensions in mm

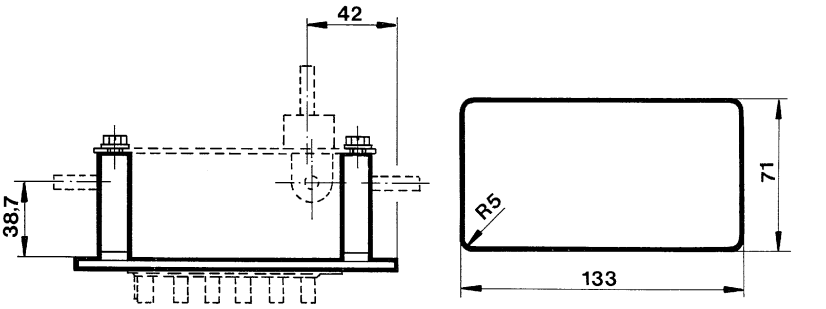


Dimensions in mm

## ORDER INFORMATION

| | |
|---|---|
| Mounting frame for counters type 225 or 250, complete | Ordering code 1 250 056 |

## Flat connectors

| | |
|---|---|
| Flat connector 2.8 x 0.8 mm for electrical connection of all counters (except for counters with screw terminals) | Order information Ord. code 3 530 077 |

## Flat steel bar

| | |
|---|---|
| Flat steel bar for the installation of connection boxes of the modular system 400<br>12 x 3 x 105 mm<br>For description see installation instructions | Order information Ord. code 2 405 058 |