E10137

Wirable socket

SDOGJ040PLSFKPG

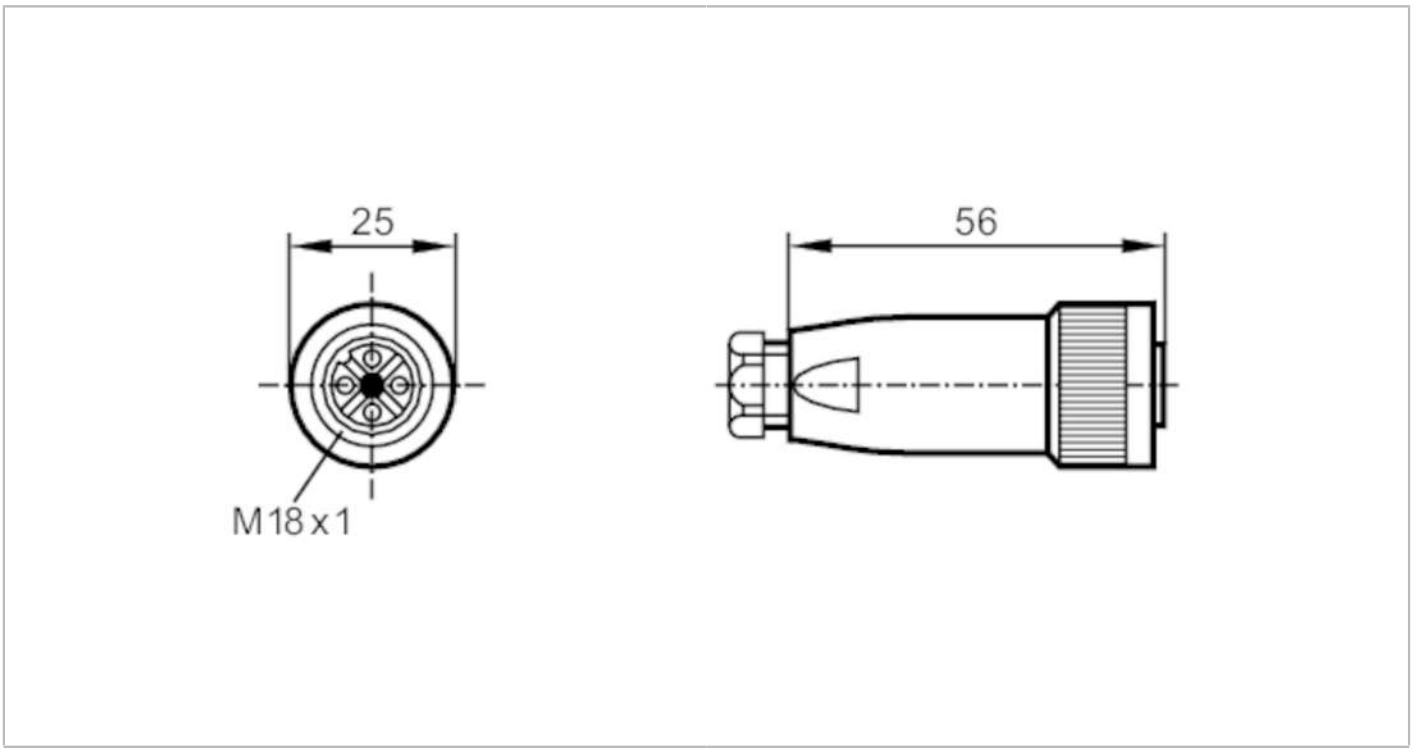

Electrical data		
Operating voltage	[V]	< 250 AC/DC
Max. current load total	[A]	4; (...40 °C)
Operating conditions		
Ambient temperature	[°C]	-40...85
Protection		IP 65
Mechanical data		
Weight	[g]	26.6
Dimensions	[mm]	25 x 25 x 56
Materials		PA
Moulded-body material		PA
Material nut		ULTRAMID
Remarks		
Pack quantity		1 pcs.

E10137

Wirable socket

SDOGJ040PLSFKPG

Electrical connection

terminals: ...0.75 mm²; Cable sheath: Ø 6...8 mm

Electrical connection - socket

Connector: 1 x M18, straight; coding: A; Moulded body: PA; Locking: ULTRAMID



Connection

