# EVC282

## Connection cable

VDOAF032MSS0001H03STGF030MSS

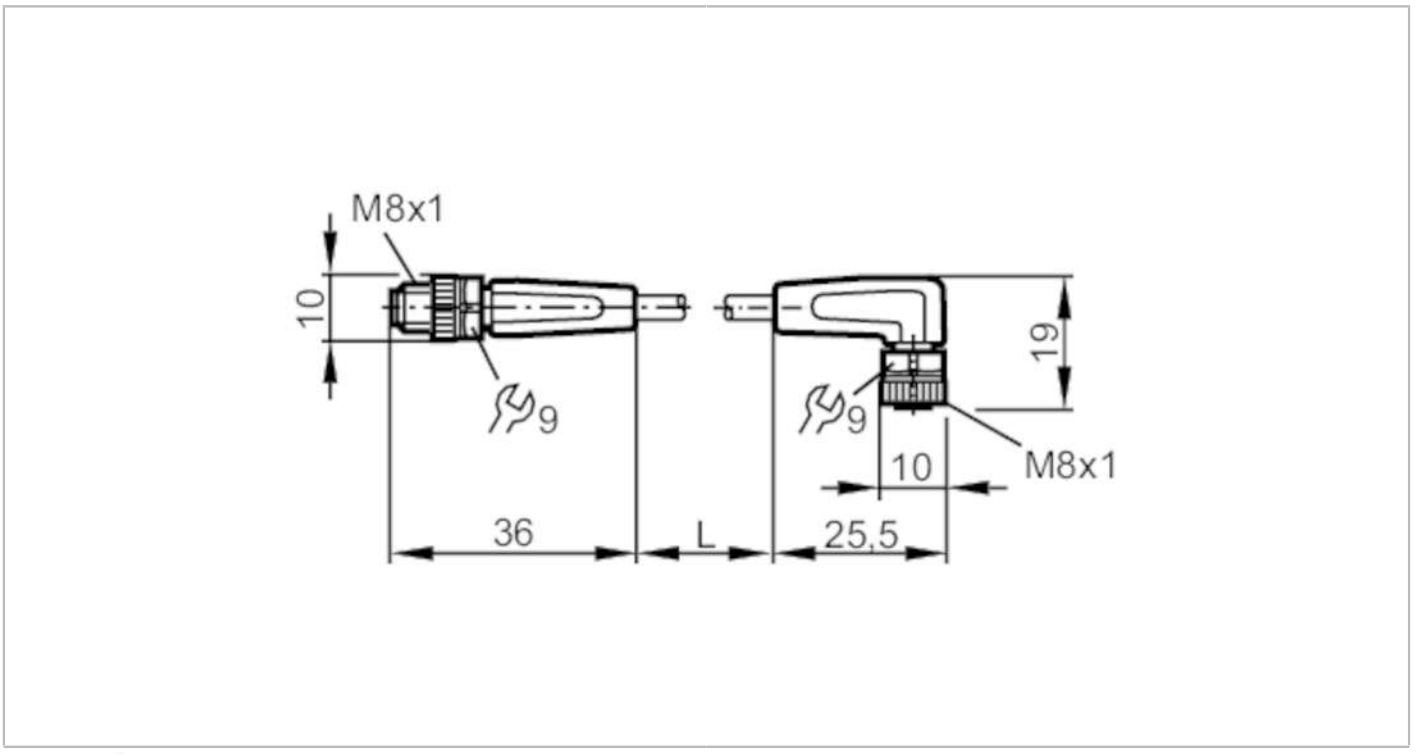


| | | |
|---|---|---|
| **Application** | | |
| Special feature | | Free from silicone; Halogen-free; Gold-plated contacts; Drag chain suitability |
| Free from silicone | | yes |
| **Electrical data** | | |
| Operating voltage | [V] | 10...36 DC |
| Protection class | | III |
| Max. current load total | [A] | 3 |
| **Outputs** | | |
| Electrical design | | PNP |
| **Operating conditions** | | |
| Ambient temperature | [°C] | -25...90 |
| Note on ambient temperature | | cULus: ...80 |
| Ambient temperature (moving) | [°C] | -25...90 |
| Note on ambient temperature (moving) | | cULus: ...80 |
| Protection | | IP 65; IP 67; IP 68; IP 69K |
| **Tests / approvals** | | |
| MTTF | [years] | 31710 |
| **Mechanical data** | | |
| Weight | [g] | 41.1 |
| Dimensions | [mm] | 10 x 10 x 36 |
| Materials | | housing: TPU orange; Sealing: FKM |
| Material nut | | brass, nickel-plated |

# EVC282

## Connection cable

VDOAF032MSS0001H03STGF030MSS

| | | |
|---|---|---|
| Drag chain suitability | yes | |
| Drag chain suitability | bending radius for flexible use | min. 10 x cable diameter |
| | travel speed | max. 3.3 m/s for a horizontal travel length of 5 m and max. acceleration of 5 m/s² |
| | bending cycles | > 5 Mio. |
| | torsional strain | ± 180 °/m |

### Displays / operating elements

| | | |
|---|---|---|
| Display | switching status | 1 x LED, yellow |
| | operation | 1 x LED, green |

### Remarks

| | |
|---|---|
| Pack quantity | 1 pcs. |

### Electrical connection - plug

Connector: 1 x M8, straight; coding: A; Locking: brass, nickel-plated; Contacts: gold-plated; Tightening torque: 0.3...0.5 Nm




### Electrical connection

Cable: 1 m, PUR, Halogen-free, black, Ø 3.7 mm; 3 x 0.25 mm² (32 x Ø 0.1 mm )

Connection

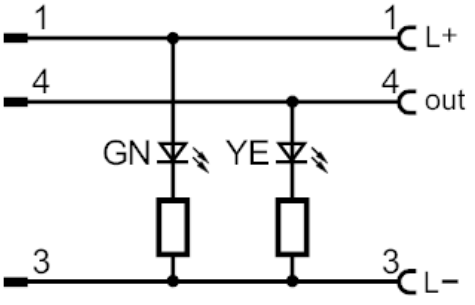


### Electrical connection - socket

Connector: 1 x M8, angled; coding: A; Locking: brass, nickel-plated; Contacts: gold-plated; Tightening torque: 0.3...0.5 Nm

