# Reservoir, Series AS3-CLA

2024-03-20

**R412007347**

### Series AS3

Qn = 14500 l/min

## Technical data

| | |
|---|---|
| Industry | Industrial |
| Parts | Reservoir |
| Reservoir | reservoir, polycarbonate, with PA protective guard |
| Filter reservoir volume | 49 cm³ |
| Protective guard | with protective guard |
| Min. working pressure | 0 bar |
| Max. working pressure | 16 bar |
| Min. ambient temperature | -10 °C |
| Max. ambient temperature | 50 °C |
| Min. medium temperature | -10 °C |
| Max. medium temperature | 50 °C |
| Medium | Compressed air |
| Weight | 0.086 kg |

## Material

| | |
|---|---|
| Material reservoir | Polycarbonate |
| Material protective guard | Polyamide |
| Seal material | Acrylonitrile butadiene rubber |
| Part No. | R412007347 |

## Technical information

The pressure dew point must be at least 15 °C less than ambient and medium temperature and may not exceed 3 °C.

The oil content of compressed air must remain constant during the life cycle.

Use only the approved oils from AVENTICS. Further information can be found in the “Technical information” document (available in https://www.emerson.com/en-us/support).

# Reservoir, Series AS3-CLA

2024-03-20

R412007347

## Dimensions in mm

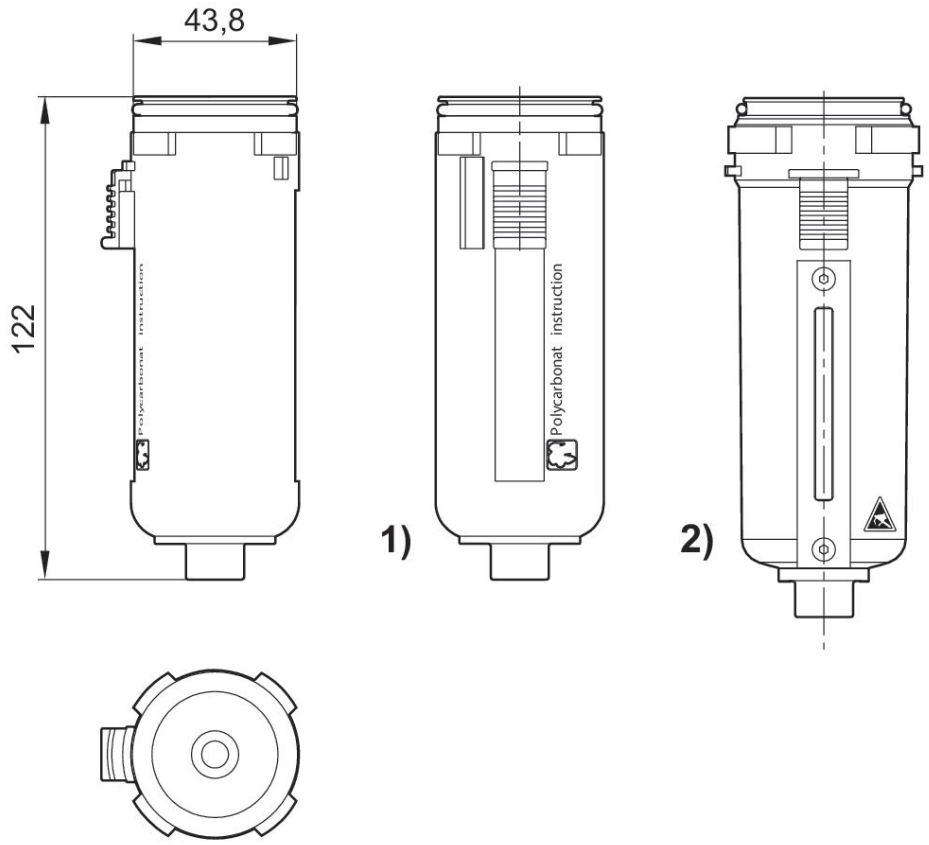


1) Plastic reservoir and protective guard with window
2) Metal reservoir with inspection glass