MURR ELEKTRONIK
stay connected

MSUD valve plug A-18mm with cable

PUR 3x0.75 ye UL/CSA 5m

MSUD
Form A (18 mm)
230 V AC/DC ±10%
LED and suppression
Further cable lengths on request.
Plastic housings with good resistance against chemicals and oils.
The resistance to aggressive media should be individually tested for your application. Further details on request.

Link to Product

Illustration



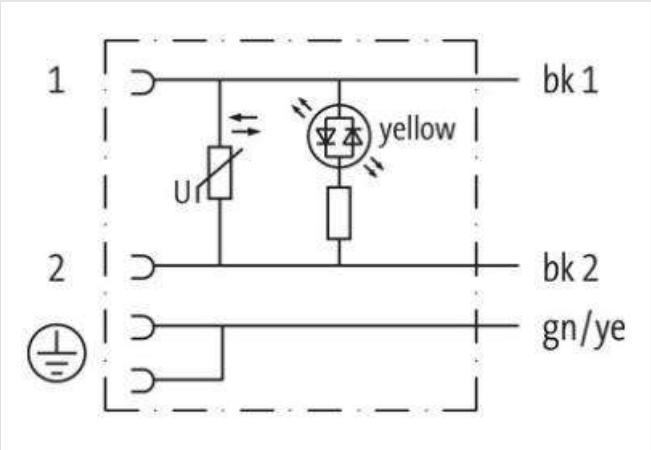

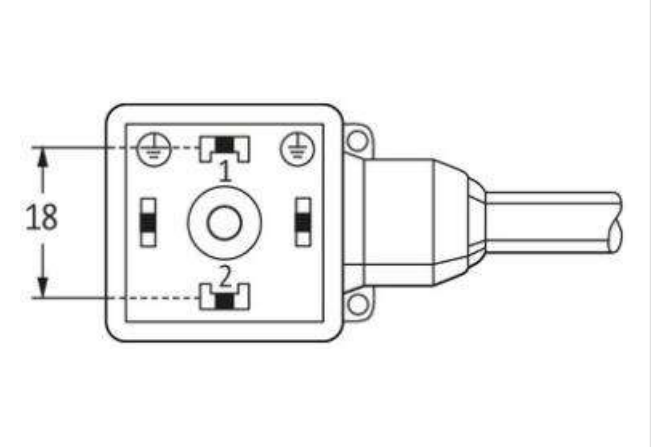

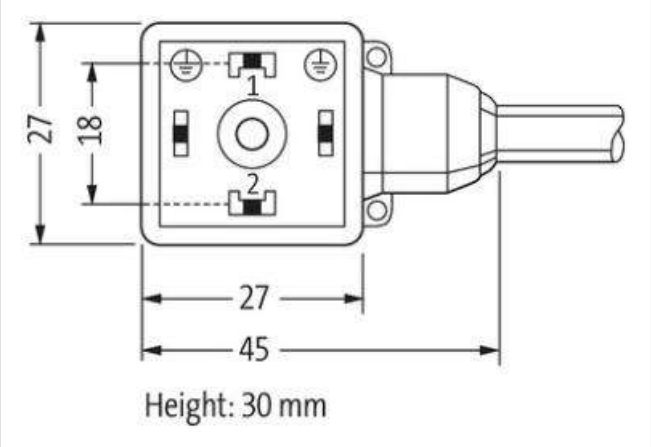

Product may differ from Image

Cable length	5 m

Side 1

Tightening torque	0,4 Nm

The information in this Product-PDF has been compiled with the utmost care.
Liability for the correctness completeness and topicality of the information is restricted to gross negligence. Version: 2024-01-31

Mounting method	inserted, screwed
Family construction form	MSUD A
Thread	M3
Material	PBT
Degree of protection (EN IEC 60529)	IP67
Commercial data	
ECLASS-6.0	27279218
ECLASS-7.0	27279218
ECLASS-8.0	27279218
ECLASS-9.0	27060311
ECLASS-10.1	27060312
ECLASS-11.1	27060312
ECLASS-12.0	27060312
ETIM-5.0	EC001855
customs tariff number	85444290
GTIN	4048879192798
Packaging unit	1
Electrical data	
Capacity CX	20 ms
Electrical data | Supply	
Operating voltage AC	230 V
Operating voltage AC min.	207 V
Operating voltage AC max.	253 V
Operating voltage DC	230 V
Operating voltage DC min.	207 V
Operating voltage DC max.	253 V
Cut-off peak voltage max.	560 V
Current operating per contact max.	4 A
Installation | Connection	
Mounting set	M3
Device protection | Electrical	
Additional condition protection degree	inserted, screwed
Mechanical data | Material data	
Coating of fitting	verzinkt
Color housing	black
Material housing	Plastic
Material screw connection	Steel
Mechanical data | Mounting data	
Mounting method	inserted, screwed
Environmental characteristics | Climatic	
Operating temperature min.	-25 °C
Operating temperature max.	85 °C
Additional condition temperature range	depending on cable quality
Cable	
Cable identification	026
Cable Type	2 (PUR/PVC)
Cable weight [g/m]	55 g
Material wire	Cu wire, bare
Resistor (core)	max. 26 Ω/km (20 °C)
Single wire Ø (core)	0.15 mm

The information in this Product-PDF has been compiled with the utmost care.
Liability for the correctness completeness and topicality of the information is restricted to gross negligence. Version: 2024-01-31

MURR ELEKTRONIK
stay connected

Construction (core)	42× 0.15 mm (multi-strand wire class 6)
Diameter (core)	3× 0.75 mm²
AWG	similar to AWG 18
Material wire isolation	PVC
Material property wire insulation	CFC-, cadmium-, silicone- and lead-free
Shore hardness wire isolation	43 ±5 D
Wire-Ø incl. isolation	1.8 mm ±5%
Color/numbering of wires	bk numbered, gnye longitudinally striped
Stranding combination	3 wires twisted
Shield	no
Material jacket	PUR/PVC
Material property (jacket)	CFC-, halogen-, cadmium-, silicone- and lead-free, matt, low-adhesion, machine easy to process, abrasion-resistant, hydrolysis and microbial resistant
Shore hardness jacket	80 ±5 A (PVC-under jacket); 85 ±5 A (PUR-jacket)
Outer-Ø (jacket)	5.9 mm ±5%
Color jacket	yellow
chemical resistance	good resistance to oil, gasoline and chemicals
Nominal voltage	UL 300 V AC
Test voltage	2000 V AC
Current load capacity	to DIN VDE 0298-4
Temperature range (fixed)	-30...+80 °C
Temperature range (mobile)	-5...+80 °C
Bend radius (fixed)	10× outer Ø
Bend radius (moving)	15× outer Ø
No. of bending cycles (C-track)	max. 2 Mio. (25 °C)
Travel speed (C-track)	max. 3.3 m/s
Acceleration (C-track)	max. 5 m/s²

The information in this Product-PDF has been compiled with the utmost care.
Liability for the correctness completeness and topicality of the information is restricted to gross negligence. Version: 2024-01-31