# Product data sheet
## Characteristics

# XMEP100BD11F
## pressure transmitter - XMEP - 100bar - G1/4A male - 0,5..4,5V - M12 - set of 1



## Main

| | |
|---|---|
| Range of product | OsiSense XM |
| Product or component type | Electronic pressure sensors |
| Pressure sensor type | Pressure transmitter |
| Pressure sensor name | XMEP |
| Electrical circuit type | Control circuit |
| Pressure sensor size | 100 Bar |
| Local display | Without |
| Controlled fluid | Fresh water (0…125 °C)<br>Air (-30…125 °C)<br>Hydraulic oil (-30…125 °C) |
| Fluid connection type | G 1/4A (male) conforming to DIN 3852-E |
| Electrical connection | 1 male connector M12 4 pins |
| [Us] rated supply voltage | 5 V DC SELV (voltage limits: 4.5…5.5 V) |
| Current consumption | < 7 mA |
| Type of output signal | Analogue |
| Analogue output function | 0.5...4.5 V, 3-wire |
| Quantity per set | Set of 1 |
| Type of packing | Individual |

## Complementary

| | |
|---|---|
| Pressure setting range | 0…100 Bar |
| Maximum permissible accidental pressure | 300 Bar |
| Destruction pressure | 600 Bar |
| Materials in contact with fluid | Fluorocarbon FPM<br>Stainless steel AISI 316L |
| Operating position | Any position |
| Protection type | Reverse polarity<br>Load short-circuit |
| Electromagnetic compatibility | Electrostatic discharge immunity test conforming to ISO 10605 criteria A 15 k-V air, 15 kV contact<br>Susceptibility to electromagnetic fields conforming to ISO 11452-2 criteri-a A 100 V/m 200…2000 MHz<br>Susceptibility to electromagnetic fields conforming to ISO 11452-4 criteri-a A 100 mA 20…400 MHz<br>Susceptibility to conducted disturbances conforming to EN/IEC 61000-4-6 criteri-a A 30 V 0.15...80 MHz<br>Electrical fast transient/burst immunity test conforming to EN/IEC 61000-4-4 crite-ria A 4 kV<br>Susceptibility to conducted transient disturbances conforming to ISO 7637-2 cri-teria B level 3 |

The information provided in this documentation contains general descriptions and/or technical characteristics of the performance of the products contained herein.
This documentation is not intended as a substitute for and is not to be used for determining suitability or reliability of these products for specific user applications.
It is the duty of any such user or integrator to perform the appropriate and complete risk analysis, evaluation and testing of the products with respect to the relevant specific application or use thereof.
Neither Schneider Electric Industries SAS nor any of its affiliates or subsidiaries shall be responsible or liable for misuse of the information contained herein.

| | |
|---|---|
| [Uimp] rated impulse withstand voltage | 0.5 KV |
| Response time on output | <= 2 ms 10...90 % of full scale |
| Measurement accuracy | +/- 0.5 % of the measuring range |
| Accuracy | 0.1 % of the measuring range |
| Drift of the sensitivity | +/- 0.02 % of measuring range/°K |
| Drift of the zero point | +/- 0.02 % of measuring range/°K |
| Repeat accuracy | +/- 0.5 % of the measuring range |
| Mechanical durability | 10000000 Cycles |
| Net weight | 0.095 Kg |
| Diameter | 26 Mm |
| Length | 38.1 Mm |

## Environment

| | |
|---|---|
| Standards | EN 13309<br>ISO 14982<br>UL 61010-1<br>EN/IEC 61326-2-3<br>ECE 10R-5<br>ISO 13766 |
| Product certifications | CE<br>CULus<br>E2 |
| Ambient air temperature for operation | -40…100 °C |
| Ambient air temperature for storage | -50…100 °C |
| Vibration resistance | 12 gn sinus (f = 20…520 Hz)test 4 conforming to ISO 16750-3<br>18 gn random (f = 10…2000 Hz)test 4 conforming to ISO 16750-3 |
| Shock resistance | 50 gn for 11 ms conforming to EN/IEC 60068-2-27 |
| IP degree of protection | IP65 conforming to EN/IEC 60529<br>IP67 conforming to EN/IEC 60529<br>IP69K conforming to EN/IEC 60529 |

## Packing Units

| | |
|---|---|
| Unit Type of Package 1 | PCE |
| Number of Units in Package 1 | 1 |
| Package 1 Weight | 94 G |
| Package 1 Height | 4.1 Cm |
| Package 1 width | 4.5 Cm |
| Package 1 Length | 8.5 Cm |
| Unit Type of Package 2 | S01 |
| Number of Units in Package 2 | 24 |
| Package 2 Weight | 2.457 Kg |
| Package 2 Height | 15 Cm |
| Package 2 width | 15 Cm |
| Package 2 Length | 40 Cm |

## Offer Sustainability

| | |
|---|---|
| Sustainable offer status | Green Premium product |
| REACh Regulation | REACh Declaration |
| EU RoHS Directive | Pro-active compliance (Product out of EU RoHS legal scope) EU RoHS Declaration |
| Mercury free | Yes |
| RoHS exemption information | Yes |
| Environmental Disclosure | Product Environmental Profile |

## Contractual warranty

| | |
|---|---|
| Warranty | 18 months |

# XMEP100BD11F

## Dimensions

mm
in.

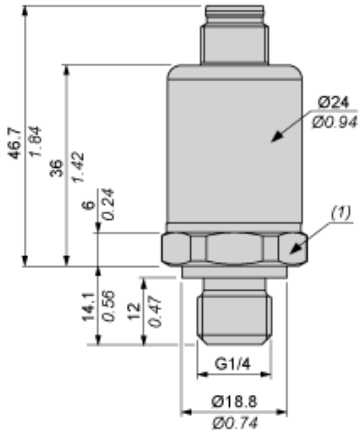


(1) SW24, tightening torque # 24 N-m / 212 lb-in

## Connections and Schema

### Connector Wiring

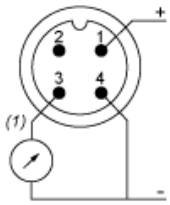


(1) V out
Pin 2 Not connected

## Performance Curves

### Curves

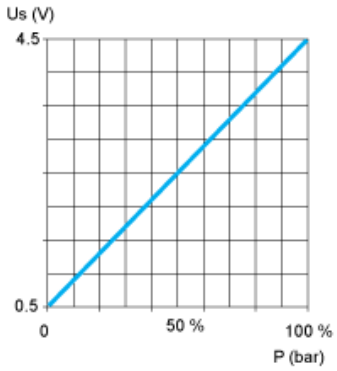


| Product Life Status : | Commercialised |
|---|---|