MR-R-SERIES

DOUBLE POLE ROUND ROCKER SWITCHES UP TO 12A 125VAC

Illuminated, non-illuminated

MR		1	0	R				

Series

Poles
1
2

Function
1 on off

Terminals
0 Solder

Rocker Shape
R Round

Marking Type
2 No mark
5 I O

Illuminated
L illuminated
N Non ill

Body Colour
B Black
W White

Rocker Colour
O Amber
R Red
G Green



TECHNICAL SPECIFICATION

- Switch for Class II appliances
- Base : Nylon 66, UL rated 94V-2 min
- Actuator : Nylon 66, UL rated 94V-2 min
- Movable Contact arm : Phosphorus bronze
- Movable Contact : Silver-cadmium alloy
- Fixed Contact : Silver-cadmium alloy
- Terminals : Silver plated copper
- Lamp : Neon (Red and Amber), Fluorescent (Green) 240V supply as standard, other voltages on request.

MATERIAL SPECIFICATION

- 12A 125VAC, 10A 250VAC 1/4HP (CSA)
- 10A 125VAC, 8A 250VAC 1/4HP (UL)
- 10(4)A 250V~T85(VDE,SEMKO,DEMKO,NEMKO, FIMKO,SEV)
- Initial contact resistance : 20m ohm MAX.
- Insulation resistance : 100M ohm MIN. at 500VDC
- Dielectric strength : 1,000VAC FOR 1 MINUTE.
- Electrical life : 10,000 cycles.
- Temperature range : -20 to + 85 degrees in Celsius

PANEL CUTOUT

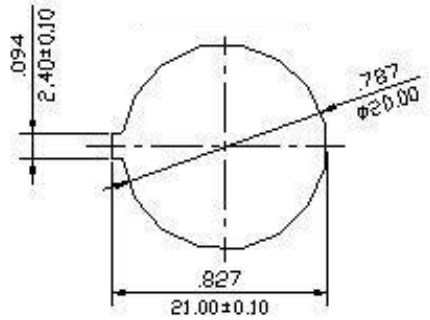

DIMENSIONS

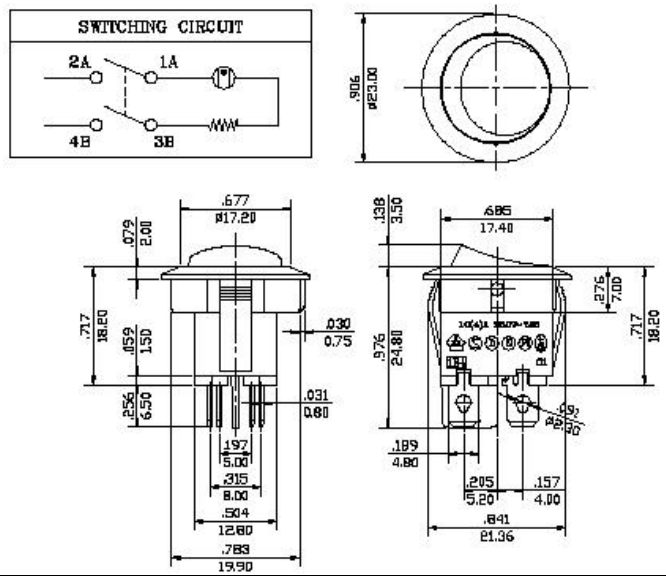

APEM COMPONENTS LTD

Drakes Drive, Long Crendon, Bucks HP18 9BA

Tel: +44 (0) 1844 202400 **Fax: +44 (0) 1844 202500**

Web site: http//www.apem.co.uk **e-mail: sales@apem.co.uk**