OJ5008

Through-beam sensor transmitter

OJS-OOKG/FO/AS

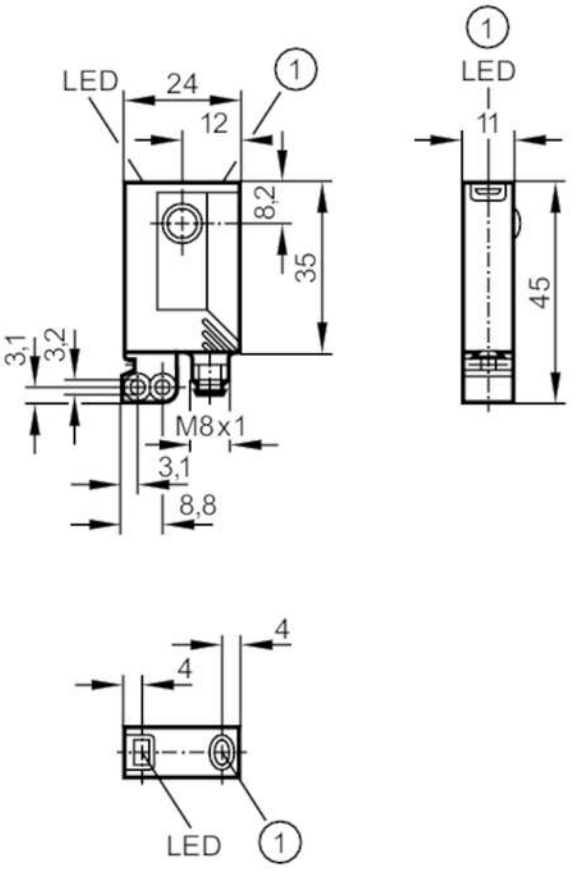

1 Pushbutton without function

Product characteristics		
Type of light		red light
Housing		rectangular
Dimensions	[mm]	35 x 24 x 11
Application		
Function principle		Through-beam sensor
Electrical data		
Operating voltage	[V]	10...30 DC
Current consumption	[mA]	< 19
Protection class		III
Reverse polarity protection		yes
Type of light		red light
Wave length	[nm]	660
Outputs		
Overload protection		yes

OJ5008

Through-beam sensor transmitter

OJS-OOKG/FO/AS

Monitoring range			
Transmitter / receiver		transmitter	
Range	[m]	< 10	
Max. light spot diameter	[mm]	1000	
Light spot dimensions refer to		at maximum range	
Operating conditions			
Ambient temperature	[°C]	-25...60	
Protection		IP 67	
Tests / approvals			
EMC		EN 60947-5-2	
MTTF	[years]	1773	
Mechanical data			
Weight	[g]	39.1	
Housing		rectangular	
Dimensions	[mm]	35 x 24 x 11	
Material		housing: ABS; fixture: diecast zinc; LED window: SEPS; pushbutton: SEPS	
Lens material		glass	
Lens alignment		Front sensing	
Displays / operating elements			
Display		Power	1 x LED, green
Accessories			
Accessories (supplied)		Basic clip: 1 x, E20964	
		screws: 2 x x M3 x 16	
		spring washers: 2 x	
		Nuts: 2 x	
Remarks			
Remarks		cULus - Class 2 source required	
Pack quantity		1 pcs.	

Electrical connection

Connector: 1 x M8

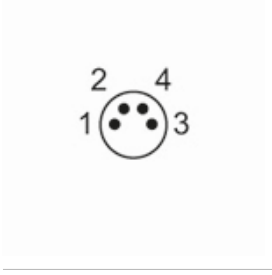

OJ5008

Through-beam sensor transmitter

OJS-OOKG/FO/AS

Connection

