Product data sheet
Characteristics

XMEP250BT21F
pressure transmitter - XMEP - 250bar - G1/4A male - 4..20mA - Deutsch - set of 1



Main

Range of product	OsiSense XM
Product or component type	Electronic pressure sensors
Pressure sensor type	Pressure transmitter
Pressure sensor name	XMEP
Electrical circuit type	Control circuit
Pressure sensor size	250 bar
Local display	Without
Controlled fluid	Fresh water 0...125 °C Air -30...125 °C Hydraulic oil -30...125 °C
Fluid connection type	G 1/4A (male) conforming to DIN 3852-E
Electrical connection	DEUTSCH connector DT04-3P 3 pins
[Us] rated supply voltage	12...24 V DC SELV, voltage limits: 9...36 V
Current consumption	< 23 mA
Type of output signal	Analogue
Analogue output function	4...20 mA, 2-wire
Quantity per set	Set of 1
Type of packing	Individual

Complementary

Pressure setting range	0...250 bar
Maximum permissible accidental pressure	750 bar
Destruction pressure	1500 bar
Materials in contact with fluid	Stainless steel AISI 316L Fluorocarbon FPM
Operating position	Any position
Protection type	Load short-circuit Reverse polarity
Electromagnetic compatibility	Susceptibility to conducted disturbances conforming to EN/IEC 61000-4-6 criteria A - test level 30 V (f = 0.15...80 MHz) Electrical fast transient/burst immunity test conforming to EN/IEC 61000-4-4 criteria A - test level 4 kV Susceptibility to conducted transient disturbances conforming to ISO 7637-2 criteria B - test level level 3 Electrostatic discharge immunity test conforming to ISO 10605 criteria A - test level 15 kV air, 15 kV contact Susceptibility to electromagnetic fields conforming to ISO 11452-4 criteria A - test level 100 mA (f = 20…400 MHz) Susceptibility to electromagnetic fields conforming to ISO 11452-2 criteria A - test level 100 V/m (f = 200…2000 MHz)
[Uimp] rated impulse withstand voltage	0.5 kV
Response time on output	<= 2 ms for 10...90 % of full scale
Measurement accuracy	+/- 0.5 % of the measuring range
Resolution	0.1 % of the measuring range
Drift of the sensitivity	+/- 0.02 % of measuring range/°K
Drift of the zero point	+/- 0.02 % of measuring range/°K
Long term stability	+/- 0.5 % of the measuring range
Mechanical durability	10000000 cycles
Product weight	0.098 kg

The information provided in this documentation contains general descriptions and/or technical characteristics of the performance of the products contained herein.
This documentation is not intended as a substitute for and is not to be used for determining suitability or reliability of these products for specific user applications.
It is the duty of any such user or integrator to perform the appropriate and complete risk analysis, evaluation and testing of the products with respect to the relevant specific application or use thereof.
Neither Schneider Electric Industries SAS nor any of its affiliates or subsidiaries shall be responsible or liable for misuse of the information contained herein.

Diameter	26 mm
Length	65.5 mm

Environment

Standards	UL 61010-1 EN/IEC 61326-2-3 ECE 10R-5 ISO 13766 EN 13309 ISO 14982
Product certifications	CE CULus E2
Ambient air temperature for operation	-40...100 °C
Ambient air temperature for storage	-50...100 °C
Vibration resistance	12 gn sinus (f = 20...520 Hz) conforming to ISO 16750-3 test 4 18 gn random (f = 10...2000 Hz) conforming to ISO 16750-3 test 4
Shock resistance	50 gn for 11 ms conforming to EN/IEC 60068-2-27
IP degree of protection	IP69K conforming to EN/IEC 60529 IP65 conforming to EN/IEC 60529 IP67 conforming to EN/IEC 60529

Offer Sustainability

Sustainable offer status	Green Premium product
RoHS (date code: YYWW)	Compliant - since 1702 - Schneider Electric declaration of conformity Schneider Electric declaration of conformity
REACh	Reference not containing SVHC above the threshold
Product environmental profile	Available
Product end of life instructions	Need no specific recycling operations

Dimensions

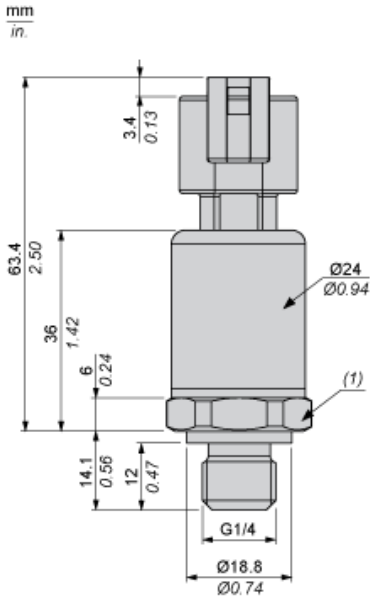

(1) SW24, tightening torque ☐ 24 N-m / 212 lb-in

Connections and Schema

Connector Wiring

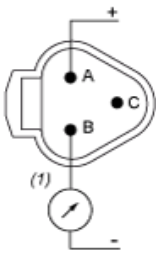

(1) I out
Pin Not connected
C :

Performance Curves

Curves

