Spherical roller bearings, cylindrical and tapered bore

Principal dimensions			Basic load ratings		Fatigue load limit	Speed ratings		Mass	Designation
			dynamic	static		Reference speed	Limiting speed		
d	D	B	C	C_0	P_u				* - SKF Explorer bearing
mm			kN		kN	r/min		kg	-
45	85	23	102	98	10,8	7500	10000	0,58	22209 E *

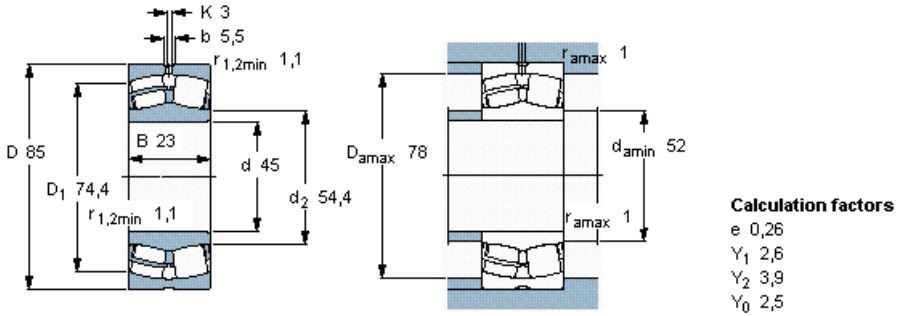

Calculation factors

e 0,26
Y_1 2,6
Y_2 3,9
Y_0 2,5