Air preparation unit, 2-part, Series NL4-ACD

- G 1/2 G 3/4
- filter porosity 5 µm
- with pressure gauge
- suitable for ATEX



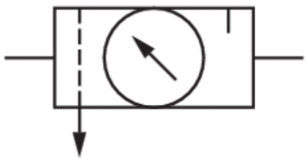

Type	2-part, Can be assembled into blocks
Parts	Filter pressure regulator, Lubricator
Mounting orientation	vertical
Certificates	suitable for ATEX
Working pressure min./max.	1,5 ... 16 bar
Ambient temperature min./max.	-10 ... 60 °C
Medium temperature min./max.	-10 ... 60 °C
Medium	Compressed air Neutral gases
Nominal flow Qn	5000 l/min
Regulator type	Diaphragm-type pressure regulator
Regulator function	with relieving air exhaust
Adjustment range min./max.	0,5 ... 10 bar
Pressure supply	single
Filter reservoir volume	50 cm³
Filter element	exchangeable
Lubricator reservoir volume	125 cm³
Type of filling	Manual oil filling
Weight	See table below

Technical data

Part No.	Port	filter porosity	Flow Qn	Condensate drain
0821300500	G 1/2	5 µm	5000 l/min	semi-automatic, open without pressure
0821300503	G 1/2	5 µm	5000 l/min	fully automatic, open without pressure
0821300501	G 1/2	5 µm	5000 l/min	semi-automatic, open without pressure
0821300504	G 1/2	5 µm	5000 l/min	fully automatic, open without pressure
0821300502	G 1/2	5 µm	5000 l/min	semi-automatic, open without pressure
0821300505	G 1/2	5 µm	5000 l/min	fully automatic, open without pressure
0821300530	G 3/4	5 µm	5000 l/min	semi-automatic, open without pressure
0821300533	G 3/4	5 µm	5000 l/min	fully automatic, open without pressure
0821300531	G 3/4	5 µm	5000 l/min	semi-automatic, open without pressure
0821300535	G 3/4	5 µm	5000 l/min	fully automatic, open without pressure

Part No.	Pressure gauge	Reservoir	Protective guard	Weight
0821300500	with pressure gauge	Polycarbonate	-	1,73 kg
0821300503	with pressure gauge	Polycarbonate	-	1,79 kg
0821300501	with pressure gauge	Polycarbonate	Steel	1,91 kg
0821300504	with pressure gauge	Polycarbonate	Steel	1,98 kg
0821300502	with pressure gauge	Die cast zinc	-	2,34 kg
0821300505	with pressure gauge	Die cast zinc	-	2,41 kg

Part No.	Pressure gauge	Reservoir	Protective guard	Weight
0821300530	with pressure gauge	Polycarbonate	-	1,73 kg
0821300533	with pressure gauge	Polycarbonate	-	1,79 kg
0821300531	with pressure gauge	Polycarbonate	Steel	1,91 kg
0821300535	with pressure gauge	Die cast zinc	-	2,41 kg

Nominal flow Qn with secondary pressure p2 = 6 bar at Δp = 1 bar

Suitable for use in Ex zones 1, 2, 21, 22., Metal protective guard can be retrofitted for all polycarbonate reservoirs

Technical information

The pressure dew point must be at least 15 °C under ambient and medium temperature and may not exceed 3 °C .
Suitable for use in Ex zones 1, 2, 21, 22.
Note: Polycarbonate reservoirs are susceptible to solvents, supplementary information can be found at "Customer information".
A change in the flow direction (from air supply on the left to air supply on the right) occurs by rotating installation by 180° about the vertical axis. Please see the operating instructions for further details.
Also suitable for separation of fluid oil or water due to the design.

Max. achievable compressed air class acc. to ISO 8573-1:2010 6 : 7 : -

Technical information

Material	
Housing	Die cast zinc
Front plate	Acrylonitrile butadiene styrene
Seals	Acrylonitrile butadiene rubber
Threaded bushing	Die cast zinc
Reservoir	Polycarbonate Die cast zinc
Protective guard	Steel
Filter insert	Polyethylene

Dimensions

Dimensions

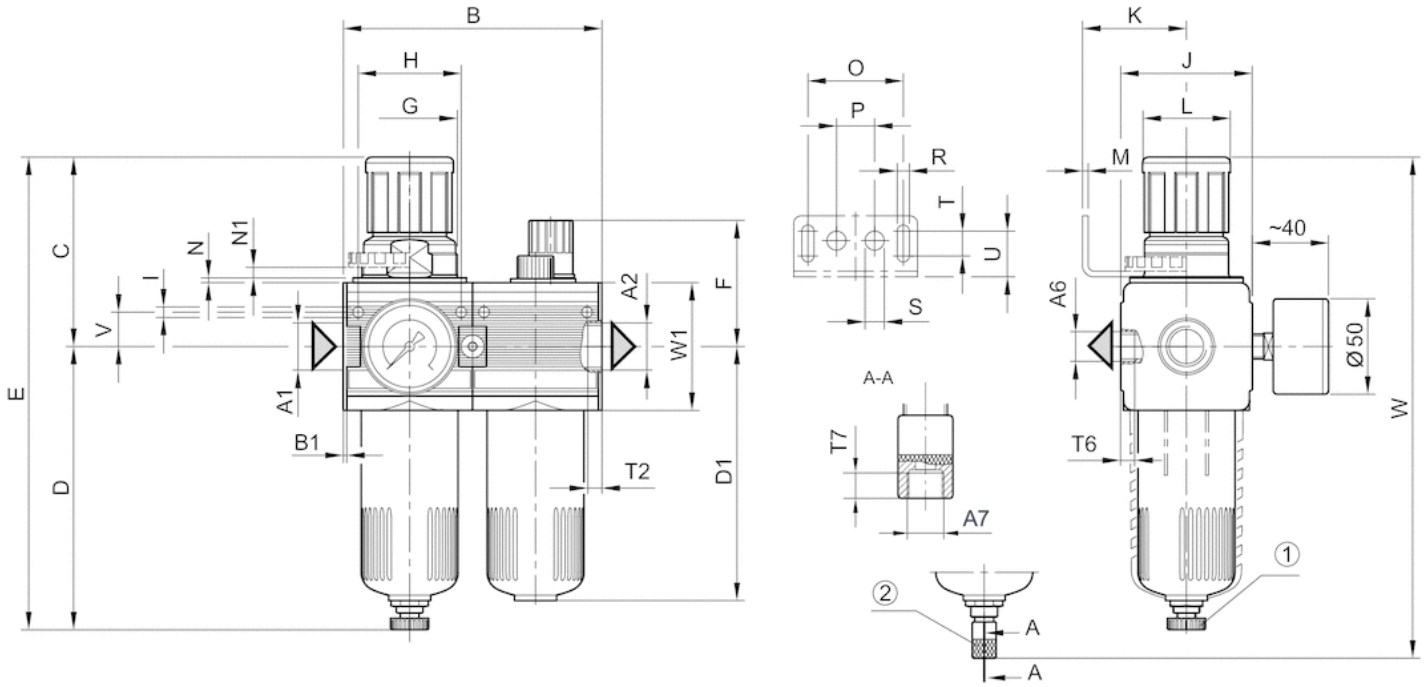

A1 = input
A2 = output
A7 = condensate drain
1) Semi-automatic condensate drain
2) fully automatic condensate drain

Dimensions in mm

A1	A2	A6	A7	B	B1	C	D	D1	E	F	G	H	I	J	K	L	M	N	N1	O
G 1/2	G 1/2	G 1/4	G 1/8	135.6	1.8	100.5	147	132	247.5	65	M50x1,5	54	5.5	69	54.5	46	3	3	5.5	50
G 3/4	G 3/4	G 1/4	G 1/8	135.6	1.8	100.5	147	132	247.5	65	M50x1,5	54	5.5	69	54.5	46	3	3	5.5	50

P	R	S	T	T2	T6	T7	U	V	W	W1
20	6.4	10	13	13	7	8.5	24	18	262.5	67
20	6.4	10	13	13	7	8.5	24	18	262.5	67

Diagrams

minimum flow rate curve (flow rate necessary for the correct functioning of the lubricator)

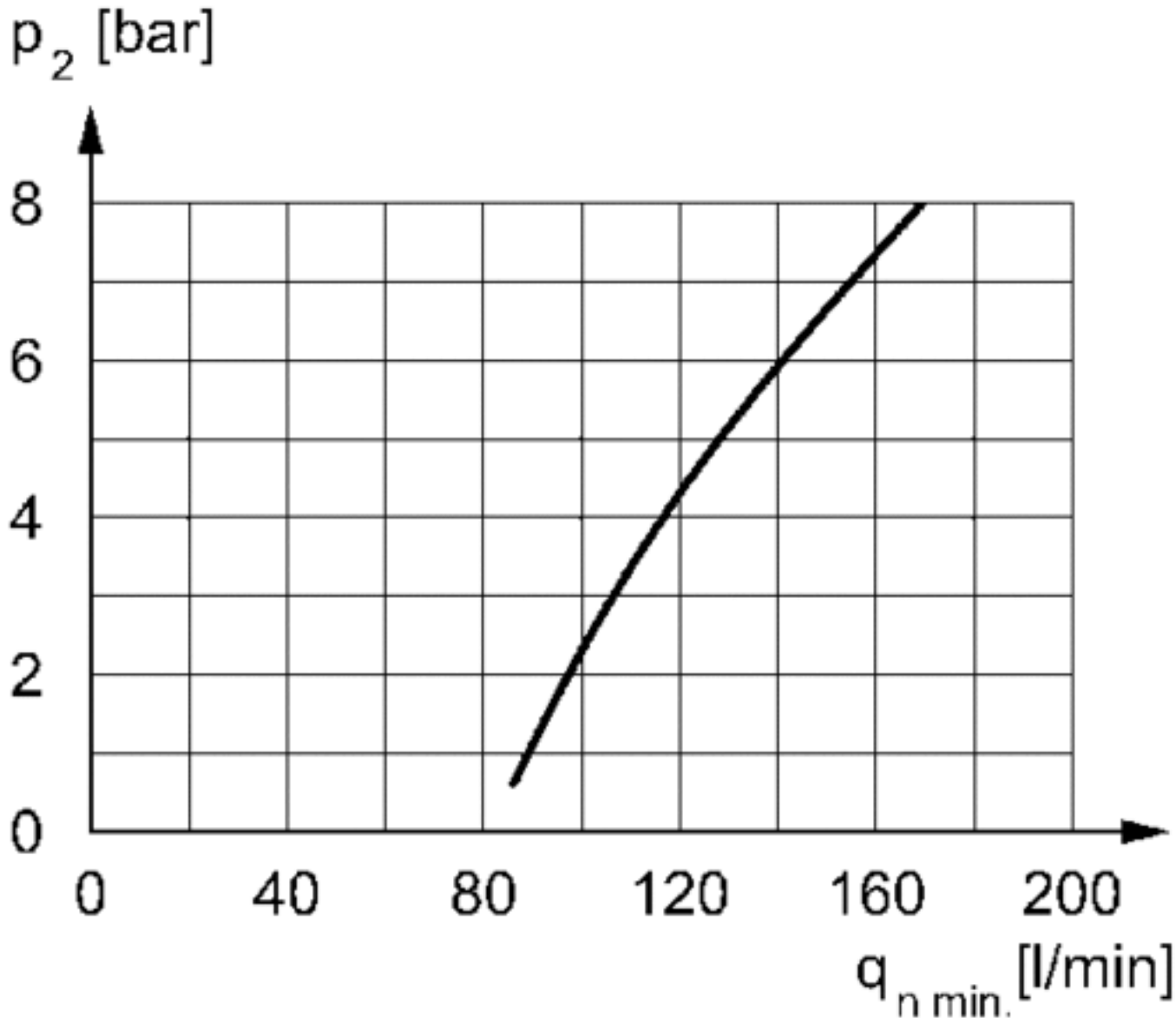

p1 = operating pressure
p2 = secondary pressure

qn = nominal flow
qnmin. = min. nominal flow

Flow rate characteristic

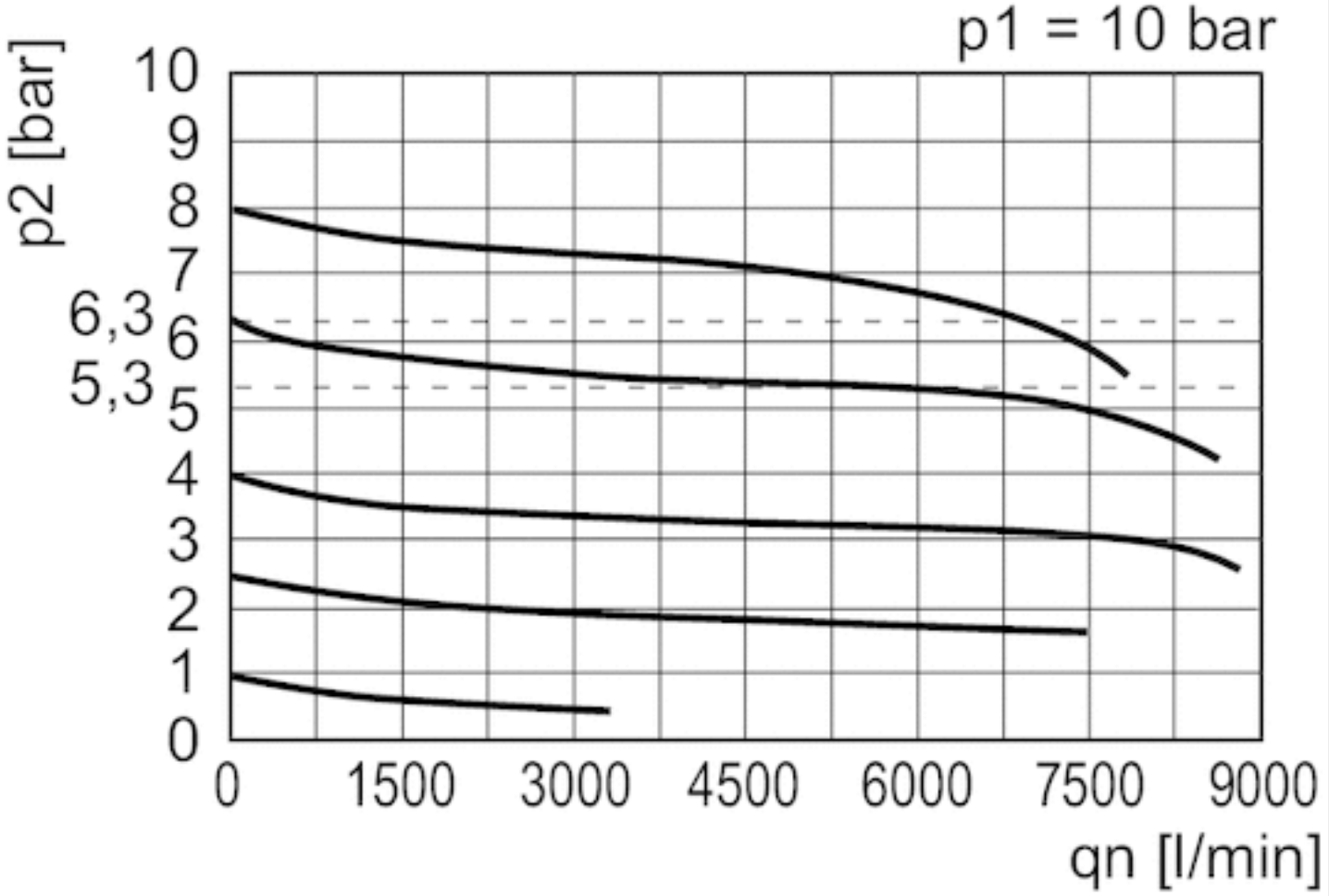

p1 = Working pressure
p2 = Secondary pressure
qn = Nominal flow