Supplementary instructions

Mounting strap

For ceiling and wall mounting

For radar sensors VEGAPULS 10, 20, 30 series and other VEGA sensors



Document ID: 63814

Contents

1 About this document ... 3
1.1 Function ... 3
1.2 Target group ... 3
1.3 Symbols used ... 3

2 For your safety ... 4
2.1 Authorised personnel ... 4
2.2 Appropriate use ... 4
2.3 Warning about incorrect use ... 4
2.4 General safety instructions ... 4
2.5 Environmental instructions ... 4

3 Product description ... 5
3.1 Configuration ... 5
3.2 Area of application ... 5

4 Mounting ... 7
4.1 Mounting preparations ... 7
4.2 Ceil mounting ... 7
4.3 Wall mounting ... 8
4.4 Tube mounting ... 9

5 Technical data ... 10

6 Dimensions ... 11

Safety instructions for Ex areas

Please note the Ex-specific safety information for installation and operation in Ex areas. These safety instructions are part of the operating instructions and come with the Ex-approved instruments.

Editing status: 2020-04-20

63814-EN-200423

1 About this document

1.1 Function

This supplementary instructions manual is valid in conjunction with the operating instructions of the instrument. It gives you all necessary information for a quick setup and safe operation of the instrument with accessory. Therefore read both instructions manuals before you start setup.

1.2 Target group

This operating instructions manual is directed to trained personnel. The contents of this manual must be made available to the qualified personnel and implemented.

1.3 Symbols used



Document ID
This symbol on the front page of this instruction refers to the Document ID. By entering the Document ID on www.vega.com you will reach the document download.



Information, note, tip: This symbol indicates helpful additional information and tips for successful work.



Note: This symbol indicates notes to prevent failures, malfunctions, damage to devices or plants.



Caution: Non-observance of the information marked with this symbol may result in personal injury.



Warning: Non-observance of the information marked with this symbol may result in serious or fatal personal injury.



Danger: Non-observance of the information marked with this symbol results in serious or fatal personal injury.



Ex applications
This symbol indicates special instructions for Ex applications.

• **List**
The dot set in front indicates a list with no implied sequence.

→ **Action**
This arrow indicates a single action.

1 **Sequence of actions**
Numbers set in front indicate successive steps in a procedure.



Battery disposal
This symbol indicates special information about the disposal of batteries and accumulators.

2 For your safety

2.1 Authorised personnel

All operations described in this operating instructions manual must be carried out only by trained qualified personnel authorised by the plant operator.

During work on and with the device, the required personal protective equipment must always be worn.

2.2 Appropriate use

The mounting straps are used for mounting VEGAPULS series 10, 20, 30 radar sensors as well as further VEGA sensors on the respective measuring point.

You can find detailed information on the application range with the respective accessory part.

2.3 Warning about incorrect use

Inappropriate or incorrect use of the instrument can give rise to application-specific hazards, e.g. vessel overfill or damage to system components through incorrect mounting or adjustment.

2.4 General safety instructions

The safety information in the operating instructions manual of the respective sensor must be noted.

2.5 Environmental instructions

Protection of the environment is one of our most important duties. That is why we have introduced an environment management system with the goal of continuously improving company environmental protection. The environment management system is certified according to DIN EN ISO 14001.

Please help us fulfil this obligation by observing the environmental instructions in this manual:

- Chapter "*Storage and transport*"
- Chapter "*Disposal*"

3 Product description

3.1 Configuration

Scope of delivery

The scope of delivery encompasses:

- Mounting strap
- Fixing material:
  - 4 pieces hexagon screws ø6 x 40 mm
  - 4 washers
  - 4 pieces straddling dowel ø8 x 40 mm
  - Counter nut G1½" (with mounting strap with sensor holder 1½")
- Self-adhesive drilling template

The further scope of delivery encompasses:

- Documentation
  - This supplementary instructions manual

Types

The mounting brackets are available in two different designs:

- For ceiling mounting
- For wall mounting

The sensor holders of the mounting brackets are designed for sensors with mounting thread G1" or G1½".

3.2 Area of application

Mounting strap - Ceiling mounting

These mounting straps are used for ceiling mounting of:

- VEGAPULS C 11, C 21, C 23 (sensor holder 1")
- VEGAPULS C 22 (sensor holder 1½")

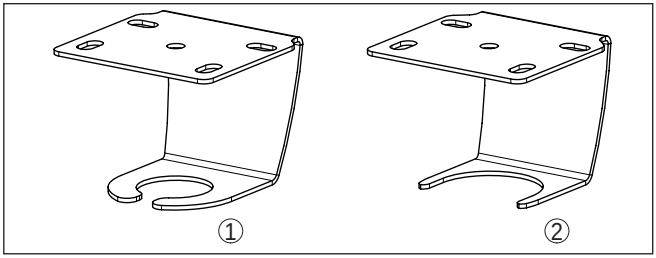

Fig. 1: Mounting strap for ceiling mounting

1 Sensor support 1"
2 Sensor support 1½"

Mounting strap - Wall mounting

These mounting straps are used for wall mounting of:

- VEGAPULS C 11, C 21, C 22, C 23 (sensor holder 1")
- VEGAPULS 11, 21, 31 (sensor holder 1½")
- Further VEGA sensors with mounting thread G1½"

The mounting straps consist of the bracket and the sensor holder. The bracket is available in different lengths.

63814-EN-200423

The sensor holder is rotatably connected to the bracket. This enables a suitable alignment of the sensor to the product surface.

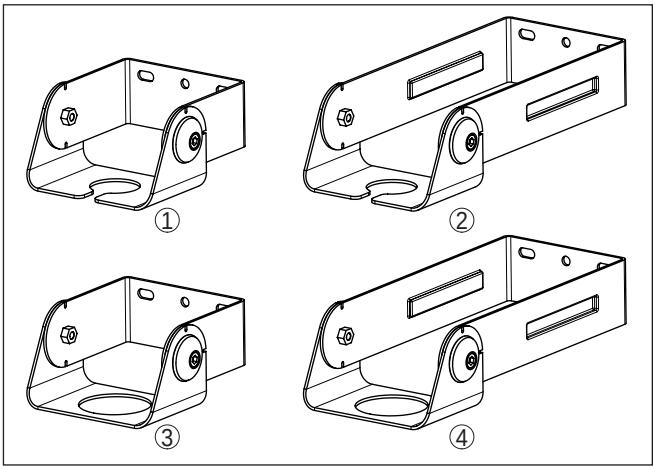

Fig. 2: Mounting bracket for wall mounting in different bracket lengths L

1 L = 80 mm, sensor holder 1"
2 L = 200 mm, sensor holder 1"
3 L = 80 mm, sensor holder 1½"
4 L = 200 mm, sensor holder 1½"

4 Mounting

4.1 Mounting preparations

The following tool is required for mounting:

- Wrench (size 10) for the hexagon screws
- Wrench (size 41) for counter nut 1"
- Wrench (size 60) for counter nut 1½"
- Hexagon socket wrench size 5 for sensor holder with wall mounting

Note:
For pipe mounting, additional standard screw pipe clamps are required on-site.

4.2 Ceil mounting

Sensors with axial cable outlet



Fig. 3: Mounting bracket for ceiling mounting - Sensors with mounting thread G1" and axial cable outlet

Sensors with lateral cable outlet

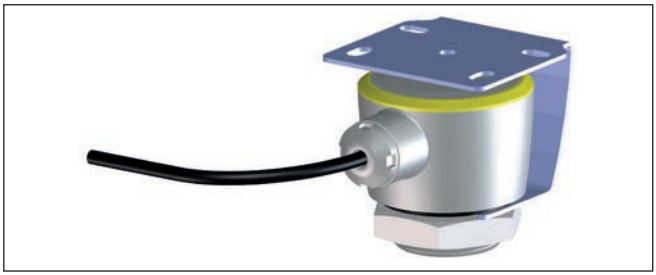

Fig. 4: Mounting bracket for ceiling mounting - Sensors with mounting thread G1½" and lateral cable outlet

4.3 Wall mounting

Sensors with axial cable outlet

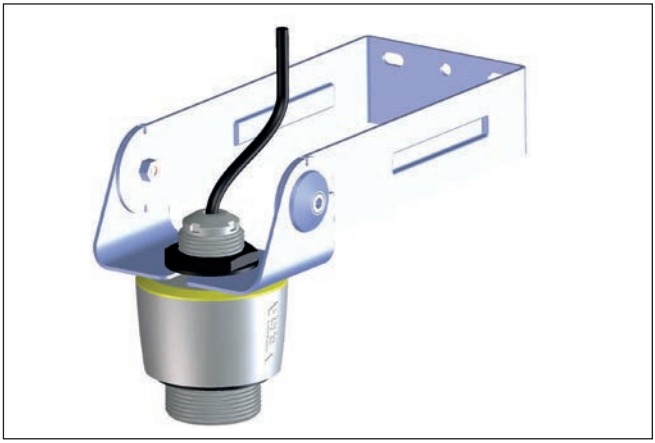

Fig. 5: Mounting bracket for wall mounting - Sensors with mounting thread G1" and axial cable outlet

Sensors with lateral cable outlet, compact sensors



Fig. 6: Mounting bracket for wall mounting - Sensors with mounting thread G1½" and lateral cable outlet as well as compact sensors

4.4 Tube mounting

Example pipe mounting vertically

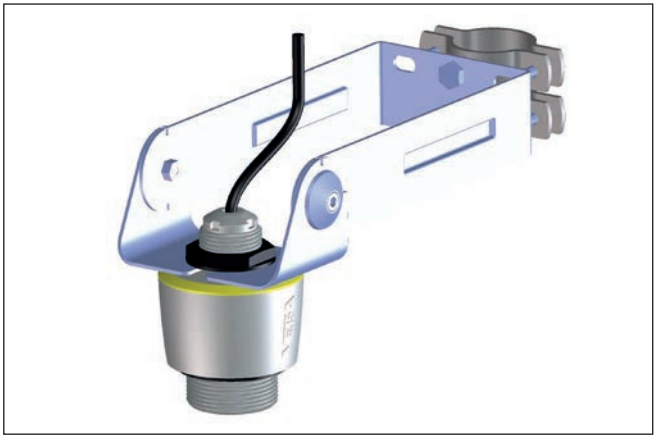

Fig. 7: Mounting bracket for vertical pipe mounting via on-site pipe clamps - Sensors with axial cable outlet

Example pipe mounting horizontally

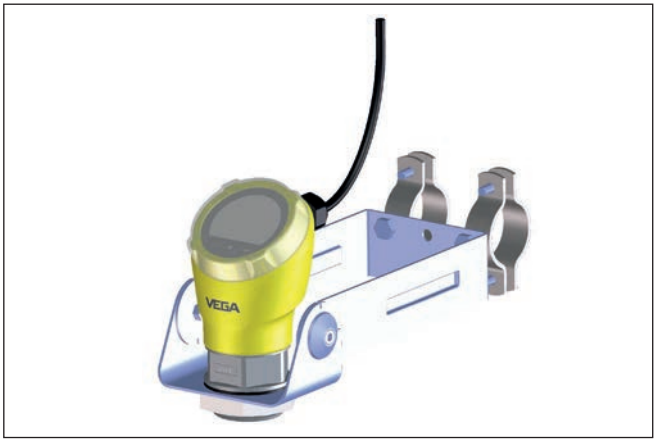

Fig. 8: Mounting bracket for vertical pipe mounting via on-site pipe clamps - Sensors with lateral cable outlet and compact sensors

5 Technical data

Materials and weights	
Material mounting strap	1.4571
Material fixing screws	StSt
Weight mounting strap, depending on version	0.5 … 0.7 kg (1.102 … 1.543 lbs)

Torques	
Torque max.	
– Hexagon socket screws	5 Nm (3.688 lbf ft)
– Hexagon screws[1)]	5 Nm (3.688 lbf ft)

Mechanical environmental conditions	
Load capacity static max.	
– Ceil mounting	5 kg (11.02 lbs)
– Wall mounting 80 mm	20 kg (44.09 lbs)
– Wall mounting 200 mm	10 kg (22.05 lbs)
Sinusoidal vibrations	Class 4M5 acc. to IEC 60271-3-4
Impacts	50 g, 2.3 ms acc. to IEC 60271-3-6 (mechanical shock)

[1)] depending on wall quality

6 Dimensions

6.1.1 Mounting strap

Mounting strap for ceiling mounting

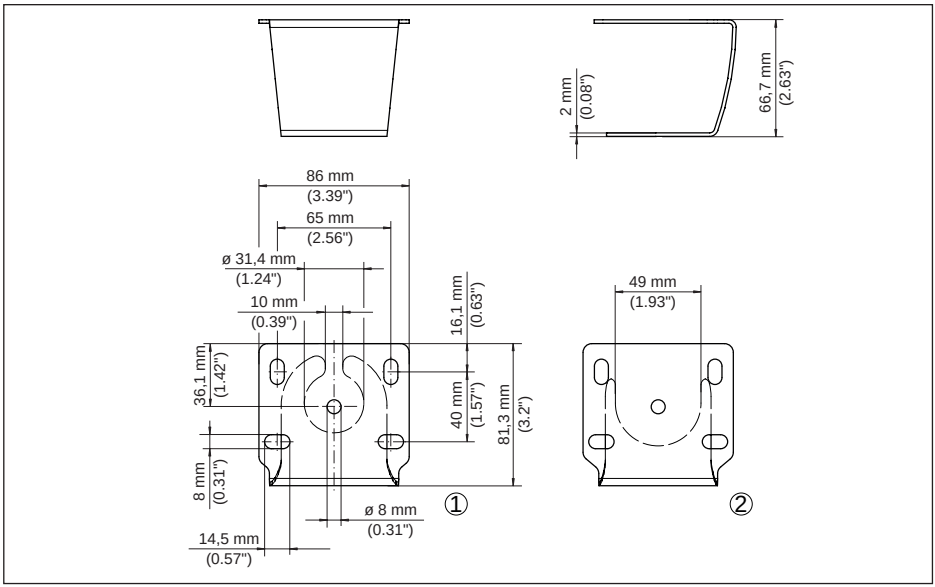

Fig. 9: Mounting strap for ceiling mounting

1 Sensor support 1"
2 Sensor support 1½"

Mounting strap for wall mounting - bracket 80 mm

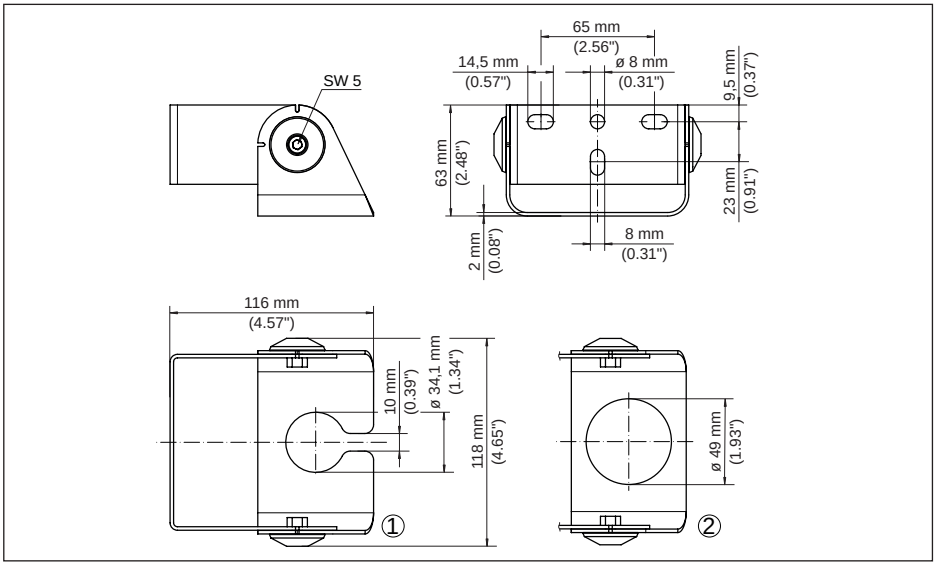

Fig. 10: Mounting strap for wall mounting - bracket 80 mm

1 Sensor support 1"
2 Sensor support 1½"

Mounting strap for wall mounting - bracket 200 mm

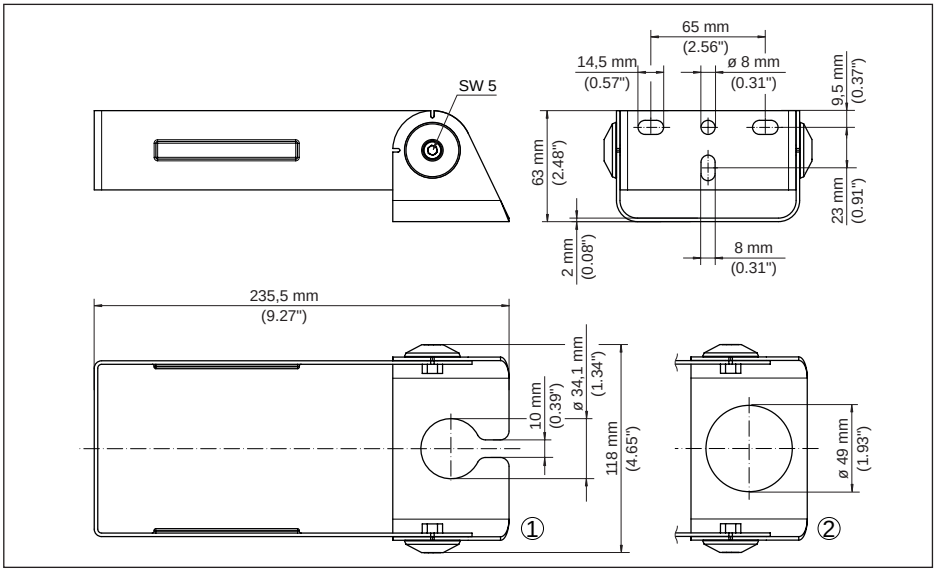

Fig. 11: Mounting strap for wall mounting - bracket 200 mm

1 Sensor support 1"
2 Sensor support 1½"

6.1.2 Reference plane of the sensors

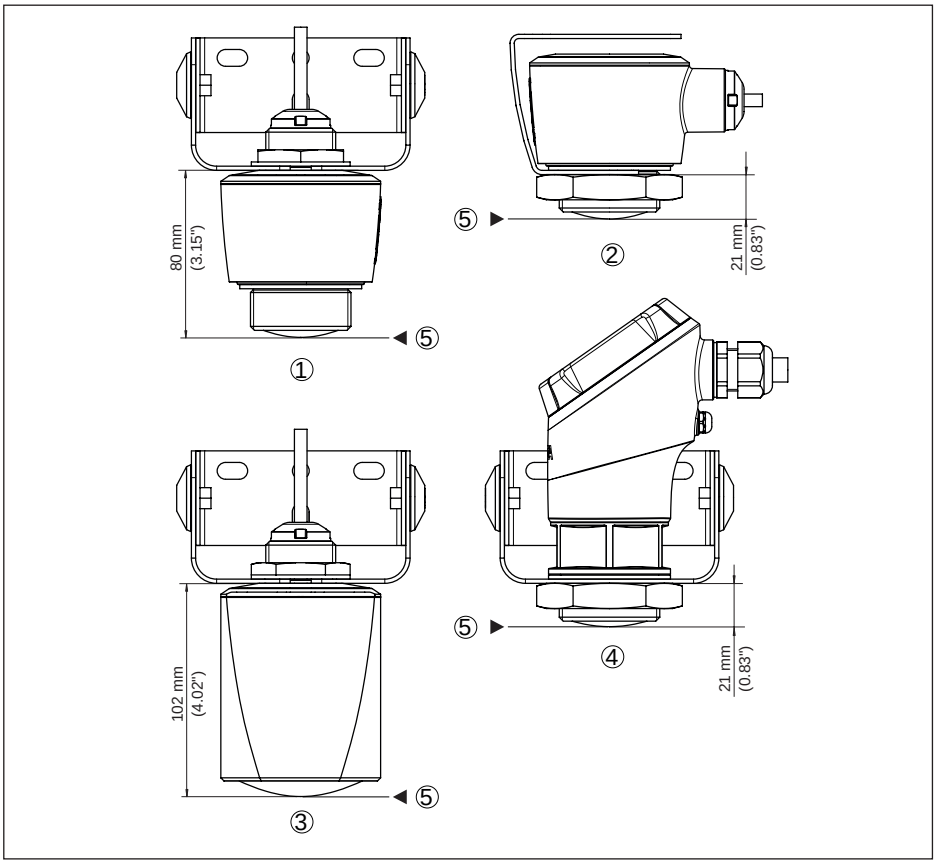

Fig. 12: Mounting bracket for ceiling and wall mounting - Distance of the sensor reference plane to the bottom of the sensor holder

1 VEGAPULS 11, 21, 31
2 VEGAPULS C 21
3 VEGAPULS C 22
4 VEGAPULS C 23
5 Sensor reference plane

6.1.3 Drilling template

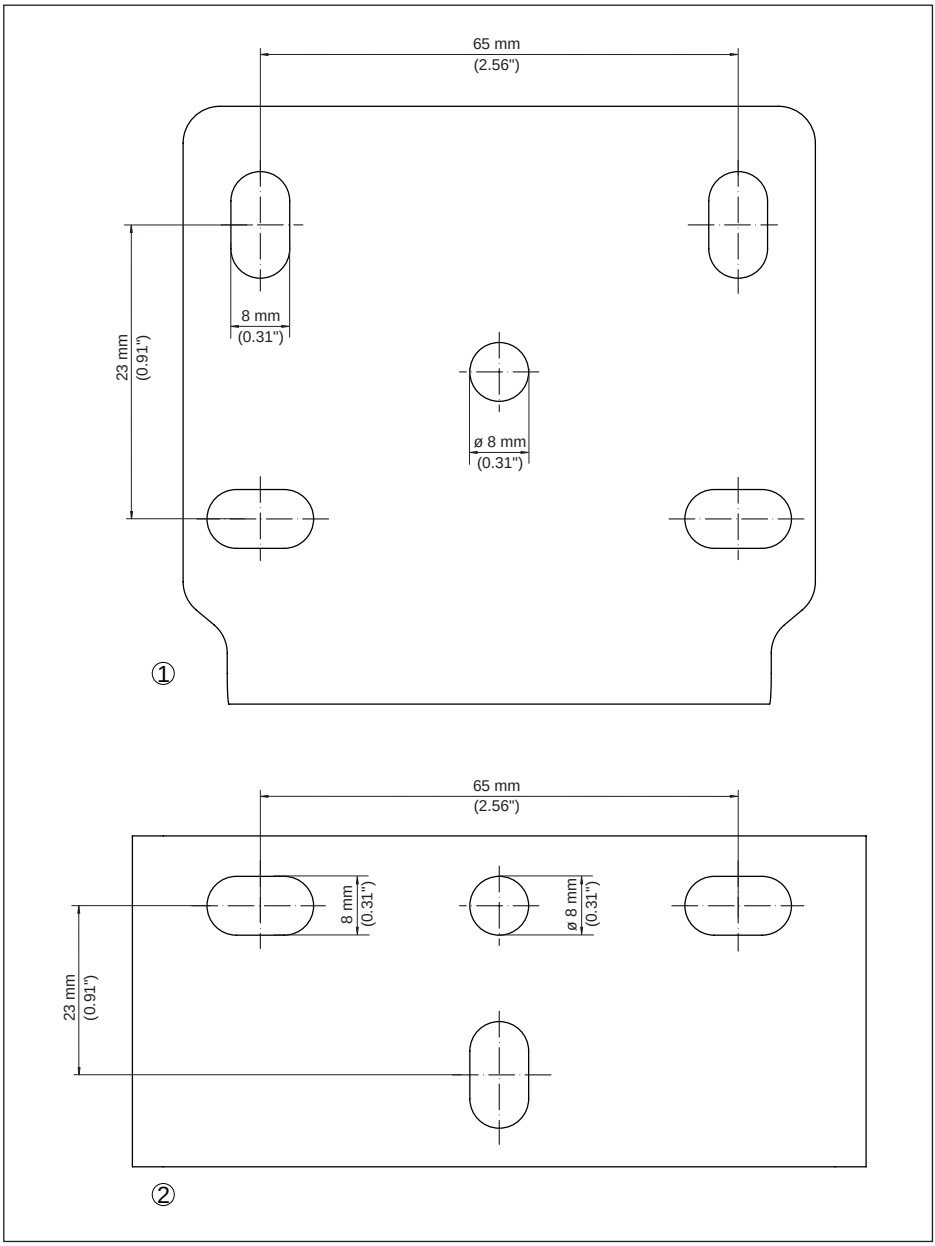

Fig. 13: Drilling template - true to scale when printed in DIN A5

1 Ceil mounting
2 Wall mounting

Printing date:

All statements concerning scope of delivery, application, practical use and operating conditions of the sensors and processing systems correspond to the information available at the time of printing.
Subject to change without prior notice

© VEGA Grieshaber KG, Schiltach/Germany 2020

63814-EN-200423

VEGA Grieshaber KG
Am Hohenstein 113
77761 Schiltach
Germany

Phone +49 7836 50-0
Fax +49 7836 50-201
E-mail: info.de@vega.com
www.vega.com