E40254

Mounting adapter for flow sensors

ADAPT G2-CLAMP/D64,0/DIN32676

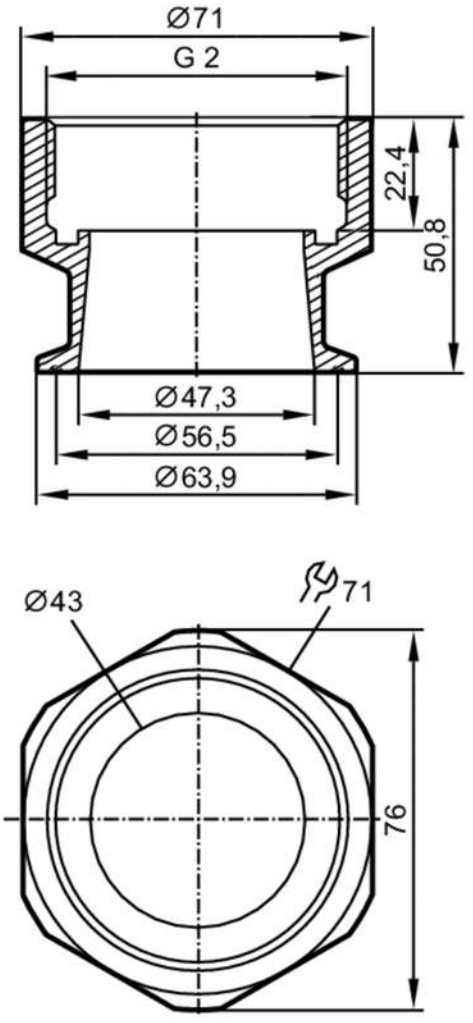

Application		
Design		for flow sensors Typ SM2, SM9
Application		for industrial applications
Media		liquids and gases
Pressure rating	[bar]	16
Tests / approvals		
Pressure Equipment Directive		A possible classification to PED depends on the application and has to be carried out by the user / operator.
Pressure Equipment Directive EAC		The adapter is intended for use in devices, machines and installations that do not fall under the categories of the technical rule TR CU 032/2013.
Safety instructions		The compatibility between medium and product material has to be checked in all applications.
Mechanical data		
Weight	[g]	1040
Materials		Adapter: stainless steel (1.4404 / 316L); O-ring: FKM 47,22 x 3,53 mm
Sensor connection		G 2
Process connection		Clamp DN50 (2") DIN 32676 (ISO 2852)

E40254

Mounting adapter for flow sensors

ADAPT G2-CLAMP/D64,0/DIN32676

Accessories	
Items supplied	O-rings: 2
Remarks	
Pack quantity	2 pcs.