Block assembly kit, Series AS5-MBR-...-W04

2024-08-13

R412009371

Series AS5

Qn = 14500 l/min



Technical data

Industry	Industrial
Min. ambient temperature	-10 °C
Max. ambient temperature	50 °C
Weight	0.075 kg
Housing material	Polyamide
Seal material	Acrylonitrile butadiene rubber
	R412009371

Block assembly kit, Series AS5-MBR-...-W04

2024-08-13

R412009371

Dimensions

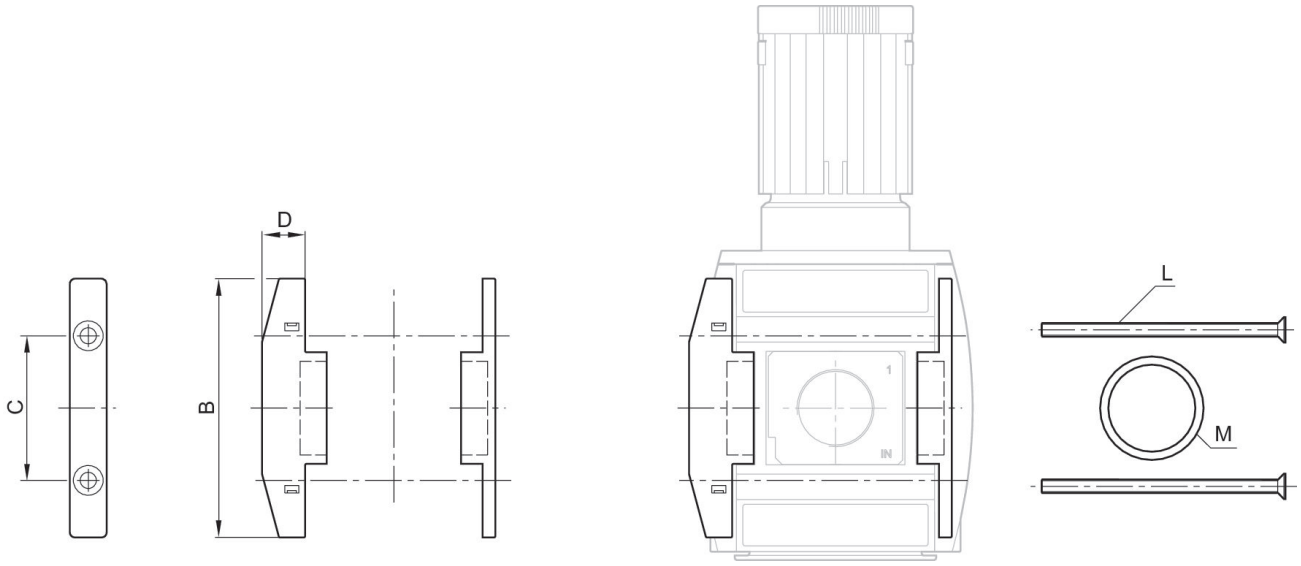

Part No.	B	C	D	L	M
R412009371	102	57	17	M6x90	37x2,3