MURR ELEKTRONIK
stay connected

Adaptor M12 male on rear / MSUD valve plug A-18mm

4-pol. A-cod.

Form A (18 mm) – M12, connector at the rear
24 V AC/DC ±25%
LED (yellow)
3-pole
Plastic housings with good resistance against chemicals and oils.
The resistance to aggressive media should be individually tested for your application. Further details on request.

Link to Product

Illustration



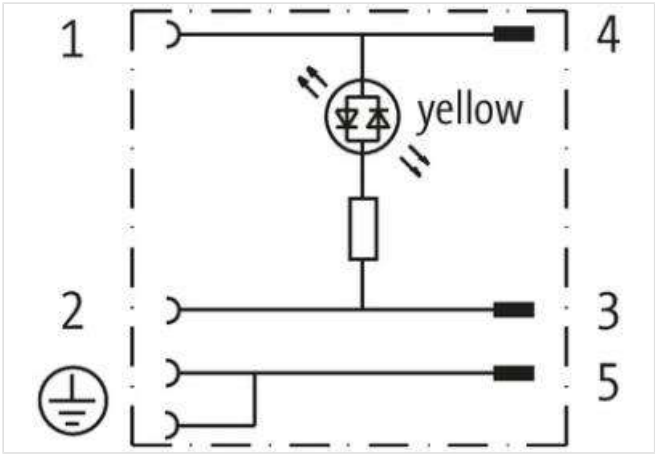

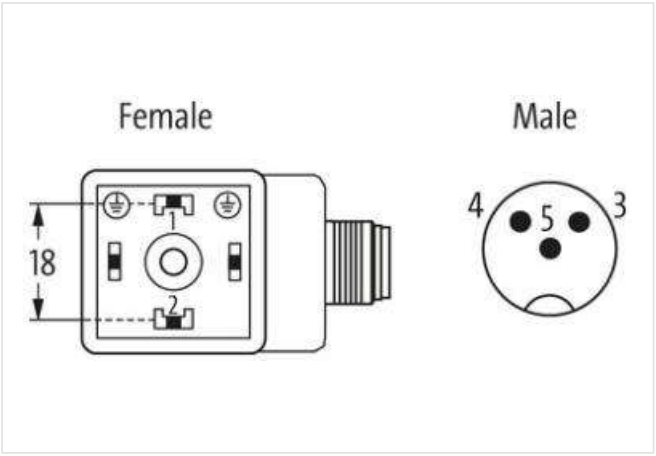

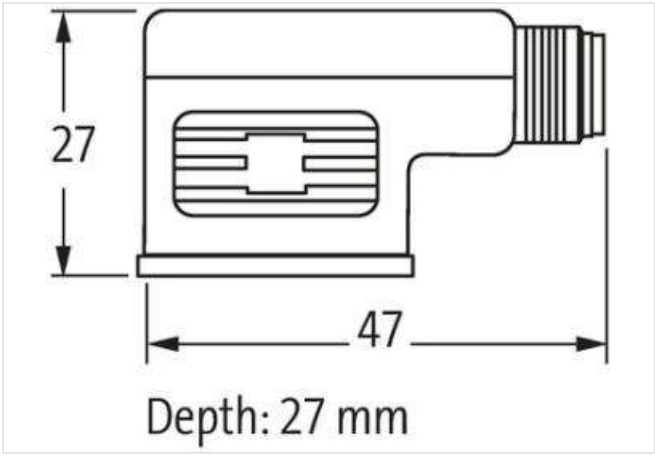

Product may differ from Image

Side 1	
Tightening torque	0,4 Nm
Family construction form	MSUD
Side 2	
Tightening torque	0,6 Nm

The information in this Product-PDF has been compiled with the utmost care.
Liability for the correctness completeness and topicality of the information is restricted to gross negligence. Version: 2024-01-31

MURR ELEKTRONIK
stay connected

Family construction form	M12
Commercial data	
ECLASS-6.0	27143423
ECLASS-6.1	27279221
ECLASS-7.0	27440104
ECLASS-8.0	27440104
ECLASS-9.0	27440106
ECLASS-10.1	27440106
ECLASS-11.1	27440106
ECLASS-12.0	27440106
ETIM-5.0	EC001855
customs tariff number	85366990
GTIN	4048879144636
Packaging unit	1
Electrical data | Supply	
Operating voltage AC	24 V
Operating voltage AC min.	18 V
Operating voltage AC max.	30 V
Operating voltage DC	24 V
Operating voltage DC min.	18 V
Operating voltage DC max.	30 V
Current operating per contact max.	4 A
Installation | Connection	
Mounting set	M3
Installation | Pin assignment	
No. of poles	2 + PE
Device protection | Electrical	
Degree of protection (EN IEC 60529)	IP67
Additional condition protection degree	inserted, screwed
Rated surge voltage	0,8 kV
Environmental characteristics | Climatic	
Operating temperature min.	-25 °C
Operating temperature max.	85 °C

The information in this Product-PDF has been compiled with the utmost care.
Liability for the correctness completeness and topicality of the information is restricted to gross negligence. Version: 2024-01-31