BFA06570230

COMPLETA STAR-DELTA STARTER, OPEN FRAME, FOR STARTING TIME UP TO 12 SECONDS AND A MAXIMUM OF 30 OPERATIONS/HOUR, MAX IEC OPERATING CURRENT 110A. COIL VOLTAGE 230VAC 50/60HZ



Product designation			Star-delta starter
Product type designation			BFA065
Electrical features			
Maximum operating current (≤440V)		A	110
Components			
Contactor standard supplied			BF6500A / BF6500A / BF3200A
Thermal relay standard supplied			No
Thermal relay to purchase separately			RF82
Auxiliary contact standard supplied			BFX1020 / BFX1011 / BFX1011
Contact characteristics			
IEC standard motor powers			
	230V	kW	30
	400V	kW	55
	440V	kW	55
	500V	kW	75
Mechanical features			
Weight		g	5200

Dimensions

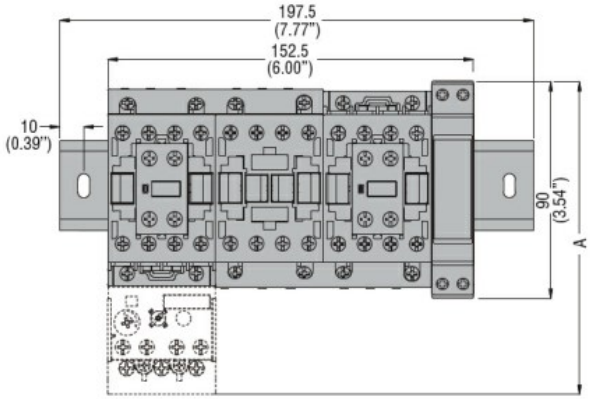

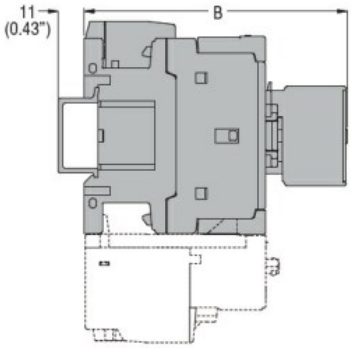

STARTER TYPE	A	B
BFA009 70	130.5 (5.14")	109.5 (4.31")
BFA012 70	130.5 (5.14")	109.5 (4.31")
BFA018 70	130.5 (5.14")	109.5 (4.31")
BFA025 70	130.5 (5.14")	109.5 (4.31")
BFA026 70	135 (5.14")	119 (4.68")
BFA032 70	135 (5.14")	119 (4.68")
BFA038 70	135 (5.14")	119 (4.68")
BFA050 70	173 (6.81")	142 (5.59")
BFA065 70	173 (6.81")	142 (5.59")
BFA080 70	183 (7.20")	142 (5.59")

Wiring diagrams

The characteristics described in this document are subject to updates or modifications at any time. The descriptions, technical and functional information, illustrations and instructions in this brochure are purely illustrative, and are consequently not contractually binding

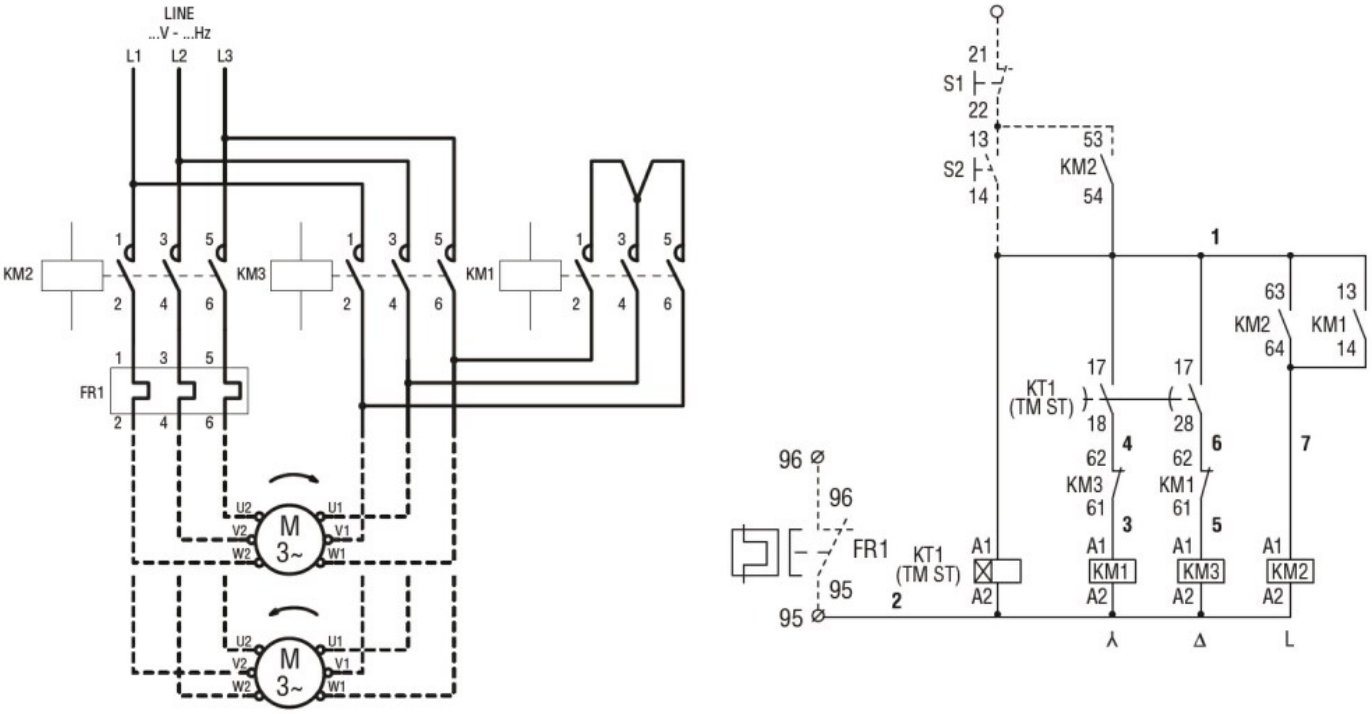

Certifications and compliance

Compliance

	IEC/EN 60947-1
	IEC/EN 60947-4-9

Certificates

/

ETIM classification

ETIM 8.0	EC001037 - Motor starter/Motor starter combination

The characteristics described in this document are subject to updates or modifications at any time. The descriptions, technical and functional information, illustrations and instructions in this brochure are purely illustrative, and are consequently not contractually binding