Installation, operation
and maintenance manual

# Matrix

## Linear Actuator



*Read this manual before installing, operating or maintaining this actuator. Failure to follow safety precautions and instructions could cause actuator failure and result in serious injury, death or property damage.*

# Contents


**1 General information** . . . . . **5**
1.1 Information on this manual . . . . . 5
1.2 Explanation of symbols . . . . . 6
1.3 Limitation of liability . . . . . 6
1.4 Copyright . . . . . 7
1.5 Spare parts . . . . . 7
1.6 Warranty terms . . . . . 7
1.7 Customer service . . . . . 7

**2 Safety** . . . . . **8**
2.1 Use . . . . . 8
2.1.1 Intended use. . . . . 8
2.1.2 Unintended and excluded use. . . . . 9
2.1.3 Essential performance . . . . . 9
2.2 Responsibility of the owner and processor . . . . . 8
2.3 Personnel requirements . . . . . 9
2.3.1 Qualifications . . . . . 9
2.4 Specific dangers . . . . . 10
2.5 Safety equipment . . . . . 11
2.6 Safeguard against restart . . . . . 13
2.7 Changes and to the device . . . . . 13
2.7.1 Warning labels . . . . . 15
2.7.2 Information labels . . . . . 15
2.8 Manufacturer's declaration of EMC compliance . . . . . 16

**3 Technical data** . . . . . **24**
3.1 Operating conditions . . . . . 24
3.2 Product label . . . . . 24

**4 Structure and function** . . . . . **25**
4.1 Overview . . . . . 25
4.1.1 Matrix MAX1 and MAX3 . . . . . 25
4.1.2 Matrix MAX6 . . . . . 25
4.2 Brief description . . . . . 26
4.3 Special features . . . . . 27
4.4 Construction group description . . . . . 28
4.5 Requirement for 3rd party power supply . . . . . 28
4.6 Connections . . . . . 29
4.7 Operating elements . . . . . 30
4.8 Options . . . . . 31
4.8.1 Emergency lowering device . . . . . 31
4.8.2 Quick adjustment . . . . . 31
4.8.3 Electrical pinch protection . . . . . 32
4.8.4 Life span display . . . . . 33
4.8.5 Mechanical pinch protection . . . . . 33
4.8.6 Master slave actuator function . . . . . 33
4.8.7 Impulse transmitter . . . . . 33
4.9 Accessories . . . . . 34

**5 Transport, packaging and storage** . . . . . **35**
5.1 Safety information for the transport . . . . . 35
5.2 Transport inspection . . . . . 35
5.3 Return to the manufacturer . . . . . 36
5.4 Packaging . . . . . 36
5.5 Storage . . . . . 37

**6 Installation and first operation** . . . . . **38**
6.1 Installation location . . . . . 39
6.2 Inspections prior to first operation . . . . . 39
6.3 Installation . . . . . 41
6.4 Connection to the control Unit . . . . . 44
6.5 Connection to operating element . . . . . 47
6.5.1 Connect MAX1 and MAX3 to operating element 47
6.5.2 Connect MAX6 to operating element . . . . . 47
6.6 Connect to power supply . . . . . 51
6.6.1 Connect MAX1 and MAX3 to power supply . . . . 51
6.6.2 Connect MAX6 to energy supply . . . . . 51
6.7 Requirements concerning the installation of the actuators with options . . . . . 54
6.7.1 Emergency lowering device . . . . . 54
6.7.2 Quick adjustment . . . . . 55
6.7.3 Electrical pinch protection . . . . . 55
6.7.4 Mechanical pinch protection . . . . . 56
6.7.5 Master-slave actuator function . . . . . 56

**7 Operation** . . . . . **59**
7.1 Safety . . . . . 59
7.2 Turn on . . . . . 60
7.3 Turn off . . . . . 60
7.4 Action before Use . . . . . 61
7.5 Action during the operation . . . . . 62
7.5.1 Normal operation . . . . . 62
7.5.2 Operate emergency lowering device . . . . . 62
7.5.3 Operate quick adjustment . . . . . 64
7.6 Disengagement in case of emergency . . . . . 67
7.6.1 Shut down MAX1 and MAX3 . . . . . 68
7.6.2 Shut down MAX6 . . . . . 69
7.7 Action after use . . . . . 69

**8 Maintenance** . . . . . **70**
8.1 Maintenance plan . . . . . 71
8.2 Maintenance work . . . . . 72
8.2.1 Cleaning . . . . . 72
8.2.2 Inspections and readings . . . . . 72
8.2.3 Check Sealing function of plug . . . . . 73
8.2.4 Check of visual condition . . . . . 75
8.2.5 Check options . . . . . 76
8.3 Measures after completed maintenance . . . . . 76

**9 Malfunctions** . . . . . **77**
9.1 Malfunction table . . . . . 79
9.1.1 Matrix MAX1 and MAX3 . . . . . 79
9.1.2 Matrix MAX6 . . . . . 80
9.2 Start of operation after fixed malfunction . . . . . 81

**10 Dismantling** . . . . . **82**
10.1 Dismantling . . . . . 83
10.1.1 Dismantling of MAX1 and MAX3 . . . . . 83
10.1.2 Dismantle MAX6 . . . . . 83
10.2 Disposal . . . . . 86

# 1 General information

## 1.1 Information on this manual

This manual provides important information on how to work with the actuator (also called device) safely and efficiently.

The Manual is part of the device, must always be kept in the device's direct proximity and should be available for the personnel at any time. All personnel working with the device must read and understand this Manual before starting any work. Strict compliance with all specified safety notes and instructions is a basic requirement for safety at work.

Moreover, the accident prevention guidelines and general safety regulations applicable at the place of use of the device must also be complied with.

For better representation of circumstances, the illustrations used are not necessarily to scale and may vary from the actual design of the device.

## 1.2 Explanation of symbols and signal words

**Safety precautions**

Warnings are identified by symbols and signal words. These signal words indicate the severity of the hazard.

Adhere to these safety precautions and act cautiously in order to avoid accidents, personal injuries and damage to property.

**Note!**
Emphasizes useful hints and recommendations as well as information for efficient and trouble-free operation.

**⚠ CAUTION**

Indicates a dangerous situation, which can lead to minor or moderate injury or property damage, if the precautionary measures are ignored.

**⚠ WARNING**

Indicates a dangerous situation, which can lead to severe personal injury or death, if the precautionary measures are ignored.

**⚠ DANGER**

Indicates a dangerous situation, which will lead to death or severe personal injury, if the precautionary measures are ignored.

## 1.3 Limitation of liability

All information and notes in this manual were compiled under due consideration of valid standards and regulations, the present status of technology and our years of knowledge and experience.

The manufacturer will not be liable for damage resulting from:

- disregarding this manual
- unintended use
- employment of untrained personnel
- unauthorized conversions
- technical modifications
- manipulation or removal of the screws on the device
- use of unapproved spare parts

In case the actuator is customised, the actual product delivered may be different from what is described in the manual. In this case, ask SKF for any additional instructions or safety precautions relevant to these actuators.

We reserve the right to make technical modifications to the actuator to improve usability.

## 1.4 Copyright

This Manual is protected by copyright law and exclusively to be used for internal purposes.

Passing this Manual on to third parties, duplication of any kind – even in form of excerpts – as well as the use and/or disclosure of the contents without the written consent of the manufacturer is not permitted, except for internal purposes.

Violations oblige to compensation. The right for further claims remains reserved.

## 1.5 Spare parts

The Matrix linear actuator is not designed for repair work. All warranty and service claims become void without notice if any screws on the linear actuator have been manipulated.

**⚠ WARNING**

**Safety hazard caused by wrong spare parts**
Wrong or faulty spare parts can adversely affect safety and cause damage, malfunctions or total failure.

Therefore:
- Use only genuine spare parts from the manufacturer.
- Spare parts in/on the device may only be replaced by the manufacturer.

The device must be dismantled and sent to the manufacturer. The address is listed on the **cover back.**

## 1.6 Warranty terms

The applicable and effective warranty terms are those contained in the manufacturer's terms and conditions of sale.

## 1.7 Customer service

SKF Customer Service is always available to provide technical information and answer questions.

The contact information for SKF Customer Service can be found on www.skf.com.

# 2 Safety

This paragraph provides an overview of all important safety aspects for optimal protection of personnel as well as safe and trouble-free operation.

Disregarding this Manual and safety regulations specified therein may result in considerable danger and possible serious injury or death.

## 2.1 Use

### 2.1.1 Intended use

The device has been designed and built exclusively for its intended purpose as described in these instructions.

The device is only used for the dynamic centric compression or tensile-loaded lift. It is only intended for interior use and is implemented in medical devices as well as in industrial and construction technology.

**⚠ WARNING**

**Risk from misuse**

Any utilization of this device beyond its intended purpose may lead to potentially hazardous situations.

Therefore:

- Strictly adhere to all safety precautions and instructions in this operating manual.
- Do not make this device subject to weather conditions, strong UV rays, corrosive or explosive air media as well as other aggressive media.
- Do not modify, retool or change the structural design or individual components of the actuator.
- Never use the device outside of the technical application and operational limits.

range of environmental conditions:

- Ambient temperature: 0 °C to + 40 °C
- Relative humidity : 5% to 85%
- atmospheric pressure: 700 hPa to 1060 hPa

#### 2.1.1.1 Product life time

the linear actuators MAX are designed for a service life of 10 years or 10 000 double strokes at a stroke length of 200 mm.

### 2.1.2 Unintended use

Any use other that the intended use, or modifications to the device without the manufacturer's written agreement, or operation beyond the technical limits, is considered unauthorized.
Specific application exemptions are:

- Flammable anaesthetic mixture with air
- Flammable anaesthetic mixture with oxygen or nitrous oxide
- Increased radiation

**Note!**
Any unauthorized use of the device can cause personal injury and property damage. Always adhere to the instructions given in this manual.

### 2.1.3 Essential performance

the essential performance of the linear actuator MAX is moving or holding a load within the boundaries defined by the device specifications given in this operating manual and the datasheet.

Any injury, damage or loss caused by violation of these instructions will be the responsibility of the customer.

## 2.2 Responsibility of the owner and processor

The device is designed for personal use and is also used in commercial applications by owner or processors.

The processor is the contracting partner of the reseller or the manufacturer. The processor installs the device in a complete system (application).

The owner or processor of the system is therefore subject to the requirements of the Occupational Health and Safety Act.

In addition to the safety instructions in this Manual, the owner or processor must do the following concerning these safety and accident prevention guidelines and environmental protection regulations, applicable to the site of the system's installation:

- Inform themselves of applicable industrial safety regulations and determine additional hazards that arise due to the specific working conditions prevailing at the site where the device is installed using risk assessment. The risk assessment must be implemented in the form of work instructions for device operation.
- Must confirm that the work instructions created for the system including the device satisfy current legal requirements and must alter the instructions if they don't.
- Clearly regulate and specify the responsibilities for installation, operation, maintenance, and cleaning.
- Ensure that all employees who deal with the device have read and understood this Manual.
- Provide personnel with the required protective equipment.
- In addition, owner must train personnel at regular intervals and inform personnel of the hazards.

In addition, owner or processors must ensure that the device is in adequate working condition. They must do the following:

- Ensure that the maintenance intervals described in these instructions are complied with.
- Have all safety devices inspected regularly for function and completeness.

## 2.3 Personnel requirements

**⚠ WARNING**

**Improper installation, operation and maintenance can result in serious injury, death or property damage.**

Use only qualified, instructed, or trained personnel (as described below) who have read, understand and follow these instructions.

### 2.3.1 Qualifications

The following qualifications are specified for different areas of activity listed in the manual.

- **An instructed person (Operator)**
  has been instructed by the customer in an orientation session on the assigned tasks and possible dangers in case of improper behaviour.

- **Qualified personnel**
  based on their professional training, know-how and experience as well as knowledge of the applicable standards and regulations is able to perform assigned work activities and to detect and avoid possible dangers on their own.

- **A professional electrician**
  based on his/her professional training, know-how and experience as well as knowledge of the applicable standards and regulations is able to perform work on electrical systems and to detect and avoid possible dangers on his/her own.
  The professional electrician has been trained for the special location where he/she works and knows the relevant standards and regulations.

Only persons who are expected to perform their tasks reliably are permitted as personnel. Persons whose reaction capability is impaired, e.g. through drugs, alcohol or medication, are not permitted.

## 2.4 Specific dangers

The following section lists the residual risks that have been determined by the risk assessment.

- **Heed the safety instructions listed here, and the warnings in subsequent chapters of this Manual, to reduce health hazards and to avoid dangerous situations.**

**⚠ DANGER**

**Danger to life caused by electric current**
Touching conductive parts causes a direct danger to life. Damage to insulation or individual components can cause danger to life.

Therefore:
- In the event of damage to insulation, switch off the power supply immediately and have the defective parts repaired.
- Work on the electrical system must be carried out only by skilled electricians.
- De-energize the machine for all work on the electrical system.
- Before maintenance, cleaning or repair work, switch off the power supply and perform lockout procedures so it cannot be turned on again.
- Do not bridge fuses or make them ineffective. When changing fuses, make sure you use the correct amperage.
- Keep moisture away from conductive parts. If you do not, this can cause short circuit.



Electric current

**⚠ WARNING**

**Electric shock hazard**
Ensure that cables cannot become pinched or damaged. Check that the mains voltage corresponds to nominal values on the product label. Ensure that the cabling is correctly installed in the cable channel.

Beware of damage to actuator caused by splashing or hose-directed water. The actuators are in accordance with IP66.

Exposure to risk of damage must be prevented at all times.

**⚠ WARNING**

**Electric shock hazard**
The linear actuator MAX do not have any on/off-switch and if required to be switched off, for example in a emergency, the actuator must be disconnected from the control unit or the power supply. Only this measure will de-energize the actuator. Applications where the actuators are built in, must provide an emergency stop switch or isolation from the mains supply on all conductors.

**⚠ WARNING**

**Crush hazard**
Do not let any object or person come in contact with the push and / or protection tube on front and rear attachment.
Risk of damage to the linear actuator caused by static and dynamic overloading of the actuator. Do not use the actuator beyond the permissible operating data

**⚠ WARNING**

**Pinch hazard**
When the actuator runs into fixed objects, the driving force can cause personal injury. If the actuator is left unattended, check that the full stroke length is free of obstacles and that there is nobody in the stroke area. Alternatively, provide a means of disconnecting all conductors from the mains power supply.

**⚠ WARNING**

**Injury due to cracks and related openings in the housing of the actuator and / or its accessories:**
If the housing is damaged due to stock, beakage or heavy wear, cease using the device and follow the dismantling instructions.

**⚠ WARNING**

Any side-acting forces can destroy the actuator and pose a risk of serious injury. During the stroke, do not manipulate any of the elements connected to the actuator.

## Moving components

**⚠ WARNING**

**Danger of injury caused by moving components**
Rotating and/or linearly moving components can cause severe injury.

Therefore:
- Do not work on or place any of your body, hands, or arms near moving components

# 2.5 Safety equipment

**⚠ WARNING**

**Danger due to malfunctioning safety equipment**
For safe operation, be sure all safety equipment is in good working order.

Therefore:
- Always check functionality of safety equipment according to the maintenance plan.
- Never disengage safety equipment.
- Safety equipment may never be by-passed or modified.

**Integration in an emergency-stop system required (for certain applications)**

The device is only intended for installation into an an application or system. It does not have its own operating control elements and does not have an independent emergency-stop-function.

Install the device so that it is part of an emergency shut-off system and can be stopped if necessary.

The emergency shut-off system has to be connected in such a way that a disruption of the power supply or the reactivation of the power supply after a power disruption cannot cause a hazardous situation for persons and objects.

The emergency shut-off systems must always be freely accessible.

**Note!**
The processor decides which applications require the installation of an emergency shut-off system.

**The following safety installations may have been installed:**
**Matrix MAX1/Matrix MAX3**

In its standard version the device does not feature an overload safety shut-off and must be turned off via an SKF control unit. MAX11 and MAX31 are exceptions.

**Matrix MAX6**

The control unit with integrated power shut-off has been installed in the motor housing.

**Matrix MAX1/Matrix MAX3**

In its standard version the device does not feature a thermal fuse protection and can be destroyed through overheating. An SKF control unit with integrated thermal switch turns the device off in emergencies.

## Overload safety cut-off

## Thermal fuse protection

## Overload protection (optional)

**Matrix MAX6**

A thermal fuse protection has been integrated in the motor housing.

> **⚠ CAUTION**
>
> To prevent damage from overheating, do not try to operate actuator until its temperature has fallen below the threshold for the switch to operate.

A ball screw nut converts the rotation of the gear unit into a linear motion. If an overload occurs when the actuator is operating, a ball detent clutch will operate, thus stopping linear motion.

Information concerning emergency lowering function, quick adjustment, electrical pinch protection and mechanical pinch protection can be found in the chapter “Structure and Function”.

**Emergency lowering function (optional)**
**Quick adjustment (optional)**
**Electric pinch protection (optional)**
**Mechanical pinch protection (optional)**

## 2.6 Safeguard against restart

> **⚠ DANGER**
>
> **Life-threatening situation through unauthorized restart**
> For work in hazard zones, there is a risk that the power supply is turned on without prior authorization. This presents a life-threatening situation for people in the hazard zone.
>
> Therefore:
> - Follow the information concerning the safeguarding against re-starting of the power supply in the chapters of this operating manual.
> - Always follow the process to safeguard against a restart as described below.

**Protect MAX1 and MAX3 against a restart.**

Pull the power line plug of the SKF control unit out of the power outlet.

**Protect MAX6 against restart.**

Pull the power line plug (connected with connection (**1**) out of the power outlet.

Fig. 1

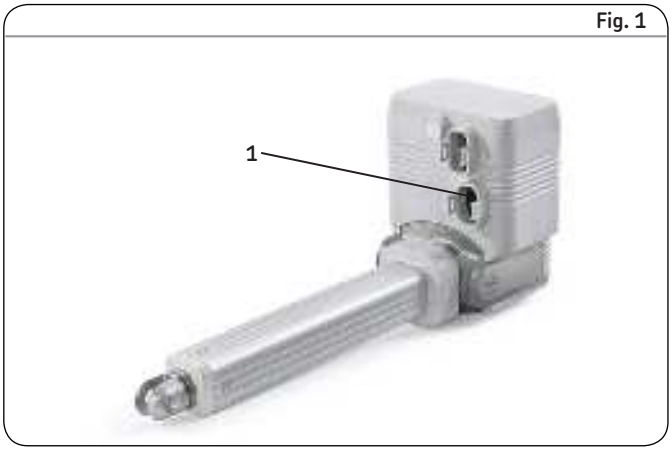

## 2.7 Modifications on the device

To avoid hazardous situations and to ensure optimal performance, do not make any changes or modifications to the device unless they have been specifically authorized by SKF.

### 2.7.1 Warning labels

The following symbols and information decals can be found in the danger zone. They refer to the immediate vicinity around their location.

**⚠ WARNING**

**Danger of injury because of illegible symbols**
Over the course of time stickers and decals may become dirty or illegible for some other reason.

Therefore:
- Keep any safety, warning and operation related decals in legible condition at all times.
- Replace damaged decals or stickers immediately.

**Do not hold on to the device.**
(part number 0120698)
The label will be attached for specific applications, e.g. for patient lifters.

Do not hold on to the actuator or casing tube.

Do not put body parts and objects inbetween moving parts.

Keep body parts or objects away from moving parts.

Adhere to operation instructions and warnings.

Fig. 2

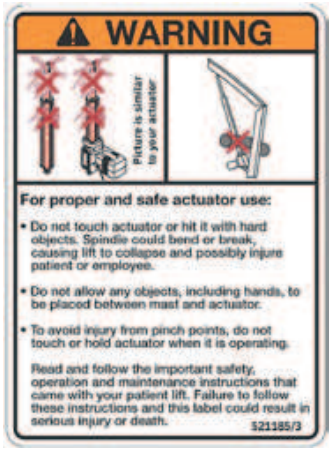

## 2.7.2 Information labels

**Operating label emergency lowering function.**
(part number 0112420)
Operation of emergency lowering function (→ Chapter 7.5.2)

Fig. 3

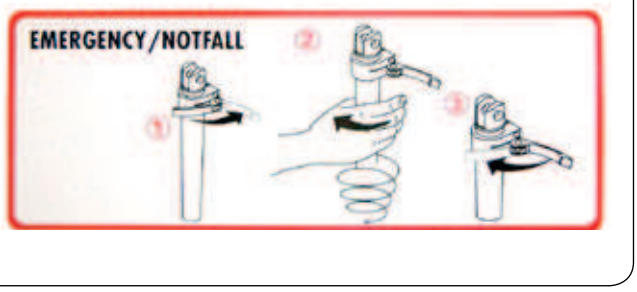


**⚠WARNING**

**Danger of injury because of illegible symbols**
Over the course of time stickers and decals may become dirty or illegible for some other reason.

Therefore:
- Keep any safety, warning and operation related decals in legible condition at all times.
- Replace damaged decals or stickers immediately.

# 2.8 Manufacturer's declaration of EMC compliance

IEC 60601-1-2:2014 Medical Electrical Equipment, Part 1-2: General requirements for basic safety and essential performance – Collateral Standard: Electromagnetic disturbances – Requirements and tests

## 2.8.1 Instructions for use

### General

**Professional healthcare facility environment**

Physician offices, dental offices, clinics, limited care facilities, freestanding surgical centers, freestanding birthing centers, multiple treatment facilities, hospitals (emergency rooms, PATIENT rooms, intensive care, surgery rooms, except near HF SURGICAL EQUIPMENT, an MR system outside a RF shielded room of an ME SYSTEM for magnetic resonance imaging)

**Essential performance**
The essential performance about the actuator MAX ist to keep, hold and move weights, loads.

The risk management (Document L5671,0012) identify the functions of these linear actuators.

All features or functions are performed properly. Unacceptable risks for patients, operators or others are performed and assessed to prevent or reduce harm.

### Warning against the stacking of equipment

**⚠ WARNING**

The use of this equipment adjacent to or stacked with other equipment should be avoided because it could result improper operation. If such use is necessary, this equipment and the other equipment should be observed to verify that they are operating normally.

### List of cables, Length of cables, accessories

**⚠ WARNING**

The use of accessories and cables other than those for which the actuator MAX1, MAX3 and MAX64 was designed, can significantly degrade electromagnetic EMISSIONS and IMMUNITY performance

**Table 1**

**Connection cables (MAX1, MAX3)**

| Description | Drawing-No | Type | Length |
|---|---|---|---|
| Connection cable straight Jack plug | 952329-1350 | 2 x AWG18 & 1 X AWG24 | 1,35 m |
| Connection cable straight Jack plug | 952329-2650 | 2 x AWG18 & 1 X AWG24 | 2,65 m |
| Connection cable coiled Jack plug | 952376-0001 | 2 x AWG18 & 1 X AWG24 | 0,78 m |
| Connection cable coiled DIN 8p | 160618 | 2 x AWG18 | 0,78 m |
| Connection cable straight DIN 8p | 160622-2650 | 2 x AWG18 & 5 X AWG24 | 1,5 m |

**Table 2**

**Power cables (MAX64)**

| Description | Plug-Type | Country | Drawing-No | Length | Comment |
|---|---|---|---|---|---|
| Straight power cable | Schuko | DE | 140306-3500 | 3,5 m | |
| Straight power cable | SEV | CH | 140316-3500 | 3,5 m | |
| Straight power cable | UL | USA | 140355-3500 | 3,5 m | |
| Straight power cable | Hospital grade | USA | 140360-3500 | 3,5 m | |
| Straight power cable | British standard | UK | 140350-3500 | 3,5 m | |
| Coiled power cable | Schuko | DE | 140342-1500 | 1,2/2,2 m | |
| Coiled power cable | SEV | CH | 140378-1200 | 1,2/2,2 m | |
| Straight power cable | SEV | CH | 140422-3500 | 3,5 m | Polyurethane cable |
| Straight power cable | Schuko | DE | 140426-3500 | 3,5 m | Polyurethane cable |

**RF communications equipment**

**⚠ WARNING**

Portable RF communications equipment (including peripherals such as antenna cables and external antennas) should be used no closer than 30cm to any part of the ME equipment. Otherwise, degradation of the performance of this equipment could result

## Technical description

**Requirements applicable to all ME equipment and ME Systems**

**a)** Compliance for each Emissions and Immunity standards

**Emission guidance**
The Linear actuator MAX1, MAX3 and MAX64 is intended for use in the electromagnetic environment specified below.
The customer or user of the actuator should ensure that they are used in such an environment.

Table 3

| Emission tests | Compliance | Electromagnetic environment- guidance |
|---|---|---|
| Radiated electromagnetic field emissions CISPR 14 (EN 55014) | Group 1 | |
| Radiated electromagnetic field emissions CISPR 14 (EN 55014) | Class B | ME equipment class B |

**b)** Deviations from Standards and allowances used (MAX1 and MAX3 only) see **table 4**, **page 19**.

**c)** Instruction for maintaining BASIC Safety and Essential performance for the expected Service life

One time approved in the final application not change is allowed due to the EMC influence.

**Note!**
Do not change the once installed final application due to EMC view

**⚠ WARNING**

This product was tested against actual conditions of frequency wireless environment present in Europe

**Table 4**

**Deviations from Standard 5.2.2.1b)**

| | | | Test type | Value | Sample | Remark |
|---|---|---|---|---|---|---|
| 60601-1-2:2014 | 9.1 | Interference voltage | emission | | | |
| | | requirement | | 0 dB | | QP margin |
| | | measurement | | –1,8 dB / 154 kHz | MAX 30 | FAIL |
| | | | | –0,9 dB /172 kHz | MAX 30 | FAIL |
| | 9.2 | Discontinous disturbance (clicks) | emission | high click rate | MAX 11, MAX 30 | FAIL (both actuator types)<br>PASS with Control unit KOM |
| | 10.4 | Surges | immission | | | |
| | | requirement L-L (AC) | | ±1 kV, ± 2 kV | MAX 11, MAX 30 | N/A (only product for 24 VDC) |
| | | requirement L-PE (AC) | | ±1 kV, ± 2 kV | MAX 11, MAX 30 | N/A (only product for 24 VDC) |
| | | requirement L-L (DC) | | ±0,5 kV | | |
| | | requirement L-PE (DC) | | ±0,5 kV | | |
| | | measurement | | ±0,5 kV | MAX 11, MAX 30 | PASS with DC power |
| 61000-6-3 | 9.2 | Discontinous disturbance (clicks) | emission | high click rate | MAX 11, MAX 30 | FAIL (both actuator types)<br>PASS with Control unit KOM |

**Action plan according the deviations:**
In the applications the MAX1 and MAX3 are operated with a Control unit supplied by mains.
Therefore we accept the deviations.
The end user must secure compliance to the applicable EMC requirements.

## Immunity Test levels (IEC 60601-1-2:2014)

**Table 5**

**Enclosure port**

| **Phenomenon** | **Basic EMC standard or testmethod** | **Immunity test levels** Professional healtcare facility environment | Home healthcare environment |
|---|---|---|---|
| **Electrostatic discharge** | IEC 61000-4-2 | ±8 kV contact<br>±2 kV, ±4 kV, ±8 kV, ±15 kV air | ±8 kV contact<br>±2 kV, ±4 kV, ±8 kV, ±15 kV air |
| **Radiated RF EM fields**[a)] | IEC 61000-4-3 | 3 V/m[f)]<br>80 MHz – 2,7 GHz[b)]<br>80% AM at 1 kHz[c)] | 10 V/m[f)]<br>80 MHz – 2,7 GHz[b)]<br>80% AM at 1 kHz[c)] |
| **Proximity fields from RF wireless communication equipments** | IEC 61000-4-3 | (→ **table 10** on **page 23**) | (→ **table 10** on **page 23**) |
| **Rated power frequency magnetic fields**[d), e)] | IEC 61000-4-8 | 30 A/m[g)]<br>50 Hz or 60 Hz | 30 A/m[g)]<br>50 Hz or 60 Hz |

[a)] The interface between the patient physiological signat simulation, if used, and the ME equipment or ME system shall be located within 0,1 m of the vertical plane of uniform field area in one orientation of the ME equipment or ME system
[b)] ME equipment and ME system that intentionally receive RF electromagnetic energy for the purpose of their operation shall be tested at the frequency of reception. Testing may be performed at other modulation frequencies identified by the risk management process. This test assesses the basic safety and essential performance of an intentional receiver when an ambient signal is in the passband. It is understood that the receiver might not achieve normal reception during the test.
[c)] Testing may be performed at other modulation frequencies identified by the risk management process.
[d)] Applies only to ME equipment an ME systems with magnetically sensitive components or circuitry.
[e)] During the test, the ME equipment or ME system may be powered at any nominal input voltage, but with the same frequency as the test signal (→ *IEC60601-1-2:2014 / table 1*)
[f)] Before modulation is applied
[g)] This test level assumes a minimum distance between the ME equipment or the ME system and sources of power frequency magnetic field of at least 15 cm. If the RISK ANALYSIS shows that the ME equipment or ME system will be used closer than 15 cm to sources of power frequency magnetic field, the immunity test level shall be adjusted as appropriate for the minimum expected distance.

**Table 6**

**Input a.c. power port**

| Phenomenon | Basic EMC standard | Immunity test levels Professional healtcare facility environment | Immunity test levels Home healthcare environment |
|---|---|---|---|
| **Electrical fast transients / bursts**[a), l), o)] | IEC 61000-4-4 | ±2 kV | ±2 kV |
| **Surges**[a), b), j), o)] **Line-to-line** | IEC 61000-4-5 | ±0,5 kV, ±1 kV | ±0,5 kV, ±1 kV |
| **Surges**[a), b), j), k), o)] **Line-to-ground** | IEC 61000-4-5 | ±0,5 kV, ±1 kV, ±2 kV | ±0,5 kV, ±1 kV, ±2 kV |
| **Conducted disturbances induced by RF field**[c), d), o)] | IEC 61000-4-6 | 3 V[m)] | 3 V[m)] |
| | | 0,15 MHz – 80 MHz | 0,15 MHz – 80 MHz |
| | | 6 V[m)] in ISM bands between 0,15 MHz and 80 MHz[n)] | 6 V[m)] in ISM and amateur radio bands between 0,15 MHz and 80 MHz[n)] |
| | | 80% AM at 1 kHz[e)] | 80% AM at 1 kHz[e)] |
| **Voltage dips**[f), p), r)] | IEC 61000-4-11 | 0% $U_T$; 0,5 cycle[g)] At 0°, 45°, 90°, 135°, 180°, 225°, 270° and 315° [q)] | 0% $U_T$; 0,5 cycle[g)] At 0°, 45°, 90°, 135°, 180°, 225°, 270° and 315° [q)] |
| | | 0% $U_T$; 1 cycle and 70% $U_T$; 25/30 cycles[h)] | 0% $U_T$; 1 cycle and 70% $U_T$; 25/30 cycles[h)] |
| | | Single phase: at 0° | Single phase: at 0° |
| **Voltage interruption**[f), i), o), r)] | IEC 61000-4-11 | 0% $U_T$; 250/300 cycle[h)] | 0% $U_T$; 250/300 cycle[h)] |

a) The test may be performed at any one power input voiltage within the ME equipment or ME system rated voltage range. If the ME equipment or ME system is tested at one power input voltage, it is not necessery to re-test at additional voltages.
b) All ME equipment and ME system cables are attached during the test.
c) Calibration for current injection clamps shall be performed in a 150 Ω system.
d) If the frequency stepping skips over an ISM amateur band, as applicable, an additional test frequency shall be used in the IMS or amateur radio band. This applies to each ISM and radio band within the specified frequency range.
e) Testing may be performed at other modulation frequencies identified by the risk management process.
f) ME equipment and ME system with a d.c. power input intended for use with a.c.-to-d.c. converters shall be tested using a converter that meets the specification of the manufacturer of the ME equipment or ME system. The immunity test levels are applied to the a.c. power input of the converter.
g) Applicable only to ME equipment and ME systems connected to single-phase a.c. mains.
h) E.g. 10/12 means 10 periods at 50 Hz or 12 periods at 60 Hz.
i) ME equipment and ME systems with rated input current greater than 16 A/phase shall be interrupted once for 250/300 cycles at any angle and at all phases at the same time ( if applicable). ME equipment and ME systems with battery backup shall resume line power operation after the test. or ME equipment and ME systems with rated input current not exceeding 16 A, all phases shall be interrupted simultaneously.
j) ME equipment and ME systems that do not have a surge protection device in the primary power circuit may be tested only at ±2 kV line(s) to earth and ±1 kV line(s) to line(s)..
k) Not applicable to class II ME equipment and ME systems.
l) Direct coupling shall be used.
m) r.m.s., before modulation is applied.
n) The ISM (industrial, scientific and medical) bands between 0,15 MHz and 80 MHz are 6,765 to 6,795 MHz; 13,553 to 13,567 MHz; 26,957 to 27,283 MHz; and 40,66 to 40,70 MHz. The amateur radio bands between 0,15 and 80 MHz are 1,8 to 2,0 MHz; 3,5 to 4,0 MHz; 5,3 to 5,4 MHz; 7,0 to 7,3 MHz; 10,1 to 10,15 MHz; 14,0 to 14,2 MHz; 18,07 to 18,17 MHz; 21,0 to 21,4 MHz; 24,89 to 24,99 MHz; 28,0 to 29,7 MHz and 50,0 to 54,0 MHz;
o) Applicable to ME equipment and ME systems with rated input current less than or equal to 16 A/phase and ME equipment and ME systems with rated input current greater than 16 A/phase.
p) Applicable to ME equipment and ME systems with rated input current less than or equal to 16 A/phase.
q) At some phase angles, applying this test to ME equipment with transformer mains power input might cause an overcurrent protection device to open. This can occur due to magnetic flux saturation of the transformer core after the voltage dip. If this occurs, the ME equipment of ME system shall provide basic safety during and after the test.
r) For ME equipment of ME systems that have multiple voltage settings or auto ranging voltage capability, the test shall be performed at the minimum and maximum rated input voltage. ME equipment of ME systems with a rated input voltage range of less than 25% of the highest rated input voltage shall be tested at one rated input voltage within the range. (→ *IEC60601-1-2:2014 / table 1, Note c*) for examples calculations.

**Table 7**

**Input a.c. power port**

| **Phenomenon** | **Basic EMC standard** | **Immunity test levels** Professional healtcare facility environment | **Immunity test levels** Home healthcare environment |
|---|---|---|---|
| **Electrical fast transients / bursts**[a), g)] | IEC 61000-4-4 | ±2 kV<br>100 kHz repetition frequency | ±2 kV<br>100 kHz repetition frequency |
| **Surges**[a), b),g)] **Line-to-line** | IEC 61000-4-5 | ±0,5 kV, ±1 kV | ±0,5 kV, ±1 kV |
| **Surges**[a), b), g)] **Line-to-ground** | IEC 61000-4-5 | ±0,5 kV, ±1 kV, ±2 kV | ±0,5 kV, ±1 kV, ±2 kV |
| **Conducted disturbances induced by RF field**[a),c), d), i)] | IEC 61000-4-6 | 3 V[h)]<br>0,15 MHz – 80 MHz<br>6 V[h)] in ISM bands between 0,15 MHz and 80 MHz[j)]<br>80% AM at 1 kHz[e)] | 3 V[h)]<br>0,15 MHz – 80 MHz<br>6 V[h)] in ISM and amateur radio bands between 0,15 MHz and 80 MHz[n)]<br>80% AM at 1 kHz[e)] |
| **Electrical transient conduction along supply lines**[f)] | ISO 7637-2 | Not applicable | As specified in ISO 7637-2 |

a) The test is applicable to all d.c. power ports intended to be connected permanently to cables longer than 3 m.
b) All ME equipment and ME system cables shall be attached during the test.
c) Internally powered ME equipment is exempt from this test if it cannot be used during battery charging, is of less than 0,4 m maximum dimenion including the maximum lenght of all cables specified and has no connection to earth, telecommunications systems, any other equipment or a patient
d) The test may be performed with the ME equipment or ME system powered at any one of its nominal input voltages.
e) Testing may be performed at other modulation frequencies identified by the risk management process.
f) For ME equipment and ME systems intended to be installed in passenger cars and light commercial vehicles including ambulances fitted with 12 V electrical systems or commercial vehicles including ambulamces fitted with 24 V electrical systems.
g) Direct coupling shall be used.
h) r.m.s., before modulation is applied.
i) If the frequency stepping skips over an ISM or amateur radio band, as applicable, an additional test frequency shall be used in the ISM or amateur radio band. This applies to each ISM and amateur radio band within the specified frequency range.
j) The ISM (industrial, scientific and medical) bands between 0,15 MHz and 80 MHz are 6,765 to 6,795 MHz; 13,553 to 13,567 MHz; 26,957 to 27,283 MHz; and 40,66 to 40,70 MHz. The amateur radio bands between 0,15 and 80 MHz are 1,8 to 2,0 MHz; 3,5 to 4,0 MHz; 5,3 to 5,4 MHz; 7,0 to 7,3 MHz; 10,1 to 10,15 MHz; 14,0 to 14,2 MHz; 18,07 to 18,17 MHz; 21,0 to 21,4 MHz; 24,89 to 24,99 MHz; 28,0 to 29,7 MHz and 50,0 to 54,0 MHz.

Table 8

**Patient coupling port**

| Phenomenon | Basic EMC standard | Immunity test levels<br>Professional healtcare facility environment | Immunity test levels<br>Home healthcare environment |
|---|---|---|---|
| **Electrostatic discharge**[e] | IEC 61000-4-2 | ±8 kV contact<br>±2 kV, ±4 kV, ±8 kV, ±15 kV air | ±8 kV contact<br>±2 kV, ±4 kV, ±8 kV, ±15 kV air |
| **Conducted disturbances inducted by RF field**[a] | IEC 61000-4-6 | 3 V[b]<br>0,15 MHz – 80 MHz<br>6 V[b] in ISM bands between 0,15 MHz and 80 MHz<br>80% AM at 1 kHz | 3 V[b]<br>0,15 MHz – 80 MHz<br>6 V[b] in ISM and amateur radio bands between 0,15 MHz and 80 MHz<br>80% AM at 1 kHz |

[a] The following apply:
- All patient-coupled cables shall be tested, either individually or bundled.
- Patient-coupled cables shall be tested using a current clamp unless a current clamp is not suitable. In cases were a current clamp is not suitable, an EM clamp shall be used.
- No intentional decoupling device shall be used between the injection point and the patient coupling point in any case.
- Testing may be perfomed at other modulation frequencies identified by the risk management process.
- Tubes that are intentionally filled with conductive liquids and intended to be connected to a patient shall be considered to be patient-coupled cables
- If the frequency stepping skips over an ISM or amateur radio band, as applicable, an additional test frequency shall be used int the ISM or amateur radio band. This applies to each ISM and amateur radioband within the specified frequency range.
- The ISM (industrial, scientific and medical) bands between 0,15 and 80 MHZ are 6,765 to 6,795 MHz; 13,553 to 13,567 MHz; 26,957 to 27,283 MHz; and 40,66 to 40,70 MHz. The amature radio bands between 0,15 and 80 MHz are 1,8 to 2,0 MHz; 3,5 to 4,0 MHz; 5,3 to 5,4 MHz; 7,0 to 7,3 MHz; 10,1 to 10,15 MHz; 14,0 to 14,2 MHz; 18,07 to 18,17 MHz; 21,0 to 21,4 MHz; 24,89 to 24,99 MHz; 28,0 to 29,7 MHz and 50,0 to 54,0 MHz.

[b] r.m.s., before modulation is applied.
[c] Discharges shall be applied with no connection to an artificial hand and no connection to patient simulation. Patient simulation may be connected after the test as needed in order to verify basic safety and essential performance.

Table 9

**Signal input/output parts port**

| Phenomenon | Basic EMC standard | Immunity test levels<br>Professional healtcare facility environment | Immunity test levels<br>Home healthcare environment |
|---|---|---|---|
| **Electrostatic discharge**[e] | IEC 61000-4-2 | ±8 kV contact<br>±2 kV, ±4 kV, ±8 kV, ±15 kV air | ±8 kV contact<br>±2 kV, ±4 kV, ±8 kV, ±15 kV air |
| **Electrical fast transients/bursts**[b], [f] | IEC 61000-4-4 | ±1 kV<br>100 kHz repetition frequency | ±1 kV<br>100 kHz repetition frequency |
| **Surges Line-to-ground**[a] | IEC 61000-4-5 | ±2 kV | ±2 kV |
| **Conducted disturbances inducted by RF field**[b],[d], [g] | IEC 61000-4-6 | 3 V[h]<br>0,15 MHz – 80 MHz<br>6 V[h] in ISM bands between 0,15 MHz and 80 MHz[i]<br>80% AM at 1 kHz[c] | 3 V[h]<br>0,15 MHz – 80 MHz<br>6 V[h] in ISM and amateur radio bands between 0,15 MHz and 80 MHz[i]<br>80% AM at 1 kHz[c] |

[a] The test applies only to output lines intended to connect directly to outdoor cables.
[b] SIP/SOPS whose maximum cable lenght is less than 3 m are excluded.
[c] Testing may be performed at other modulation frequencies identified by the risk management process.
[d] Calibration for current injection clamps shall be performed in a 150 Ω system.
[e] Connecters shall be tested per 8.3.2 and Table 4 of IEC 61000-4-2:2008. For insulated connectors shells, perform air discharge testing to the connecto shell and pins using the rounded tip finger of the ESD generator. with the exception that the only connector pins that are tested are those that can be contacted or touched, under conditions of intended use, by the standard test finger shown in Figure 6 of the general standard, applied in a bent or straight position.
[f] Capacitive coupling shall be used.
[g] If the frequency stepping skips over an ISM or amateur radio band, as applicable, an additional test frequency shall be used in the ISM or amateur radio band. This applies to each ISM and amateur radio band within the specified frequency range.
[h] r.m.s., before modulation is applied.
[i] The ISM (industrial, scientific and medical) bands between 0,15 MHz and 80 MHz are 6,765 to 6,795 MHz; 13,553 to 13,567 MHz; 26,957 to 27,283 MHz; and 40,66 to 40,70 MHz. The amateur radio bands between 0,15 and 80 MHz are 1,8 to 2,0 MHz; 3,5 to 4,0 MHz; 5,3 to 5,4 MHz; 7,0 to 7,3 MHz; 10,1 to 10,15 MHz; 14,0 to 14,2 MHz; 18,07 to 18,17 MHz; 21,0 to 21,4 MHz; 24,89 to 24,99 MHz; 28,0 to 29,7 MHz and 50,0 to 54,0 MHz.

Table 10

**71.10 - Table title - heading**

| Test frequency | Band[a)] | Service[a)] | Modulation[b)] | Maximum power | Distance | Immunity test level |
|---|---|---|---|---|---|---|
| MHz | MHz | – | – | W | m | V/m |
| 385 | 380–390 | TETRA 400 | Puls modulation[b)] 18 Hz | 1,8 | 0,3 | 27 |
| 450 | 430–470 | GMRS 460, FRS 460 | FM[c)] ±5 kHz deviation 1 kHz sine | 2 | 0,3 | 28 |
| 710 745 780 | 704–787 | LTE band 13, 17 | Pulsmodulation[b)] 217 Hz | 0,2 | 0,3 | 9 |
| 810 870 930 | 800–960 | GSM 800/900, TETRA 800, IDEN 820, CDMA 850, LTE band 5 | Puls modulation[b)] 18 Hz | 2 | 0,3 | 28 |
| 1 720 1 845 1 970 | 1 700–1 990 | GSM 1800 CDMA 1900, GSM 1900, DECT LTE band 1, 3, 4, 25; UMTS | Pulse modulation[b)] 217 Hz | 2 | 0,3 | 28 |
| 2 450 | 2 400–2 570 | Bluetooth WLAN 802.11 b/g/n RFID 2450 LTE band 7 | Pulse modulation[b)] 217 Hz | 2 | 0,3 | 28 |
| 5 240 5 500 5 785 | 5 100–5 800 | WLAN 802.11 a/n | Pulse modulation[b)] 217 Hz | 0,2 | 0,3 | 9 |

**NOTE:** If necessary to achieve the immunity test level, the distance between the transmitting antenna and the ME equipment or ME system may be reduced to 1 m. The 1 m test distance is permitted by IEC 61000-4-3.

[a)] For some services, only the uplink frequencies are included.
[b)] The carrier shall be modulated using a 50% duty cycle square wave signal.
[c)] As an alternative to FM modulation, 50% pulse modulation at 18 Hz may be used because while it does not represent actual modulation, it would be worst case.

# 3 Technical data

**Note!**
The technical data (dimensions, weight, output, connection values etc.) can be found in the enclosed drawings and data sheets (→ *Appendix*).

## 3.1 Operating conditions

**Environment**

| Information | Value | Unit |
|---|---|---|
| Temperature range | 0 to +40 | °C |
| Relative atmospheric humidity, (no build up of condensation) | 5 to 85 | % |

**Duration (intermittent)**

| Information | Value | Unit |
|---|---|---|
| Maximum operating time without a break | 1 | Minutes |
| Break until next operation | 9 | Minutes |

## 3.2 Product label

Fig. 4

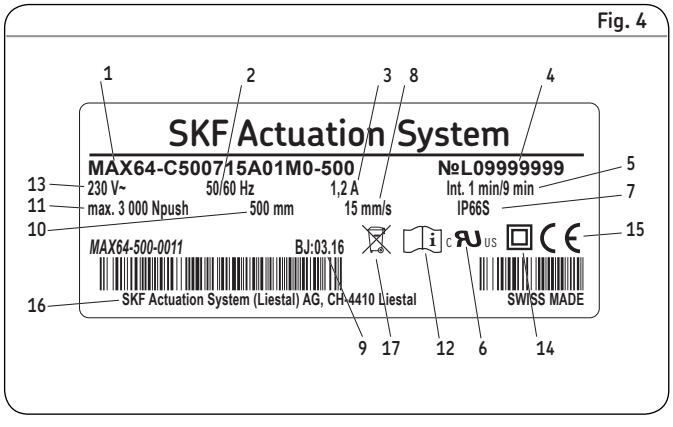


***The product label provides the following Information***

***1*** *Identification of type*
***2*** *Power frequency*
***3*** *Power consumption*
***4*** *Serial number*
***5*** *Power-on/of time (duty cycle)*
***6*** *Inspection mark UL*
***7*** *IP safety type*
***8*** *Speed of linear actuator*
***9*** *Manufacturing date (month/year)*
***10*** *Extension (stroke)*
***11*** *Force*
***12*** *Read this user manual*
***13*** *Energy (Main supply voltage)*
***14*** *Class II equipment*
***15*** *CE-mark (CE-Conformity)*
***16*** *Manufacturer's address*
***17*** *Waste symbol*

# 4 Structure and function

## 4.1 Overview

### 4.1.1 Matrix MAX1 and MAX3

Fig. 5

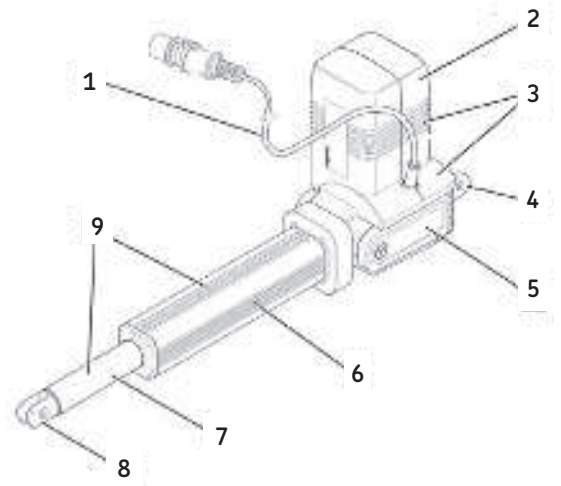


***Matrix MAX1 and MAX3***

***1*** *Connection cable on control*
***2*** *Multi-shell plastic housing*
***3*** *Motor part*
***4*** *Hinge head*
***5*** *Bracket*
***6*** *Casing tube*
***7*** *Actuator*
***8*** *Fork head of the actuator*
***9*** *Linear unit*

### 4.1.2 Matrix MAX6

Fig. 6

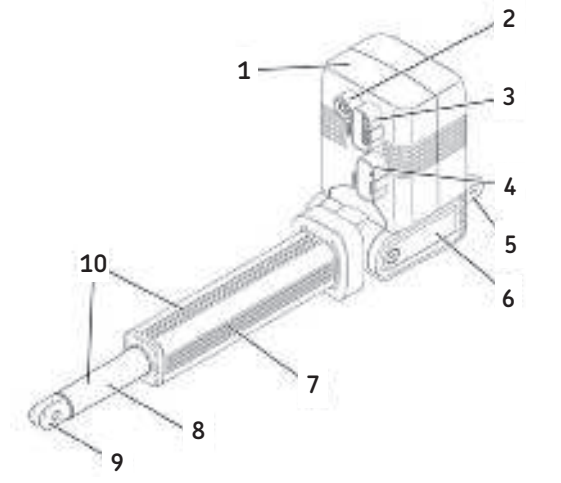


***Matrix MAX6***

***1*** *Multi-shell plastic housing*
***2*** *Connection of slave actuator (optional)*
***3*** *Connection of operation element*
***4*** *Connection of power line*
***5*** *Hinge head*
***6*** *Bracket*
***7*** *Casing tube*
***8*** *Actuator*
***9*** *Fork head of the actuator*
***10*** *Linear unit*

# 4.2 Brief description

Fig. 7

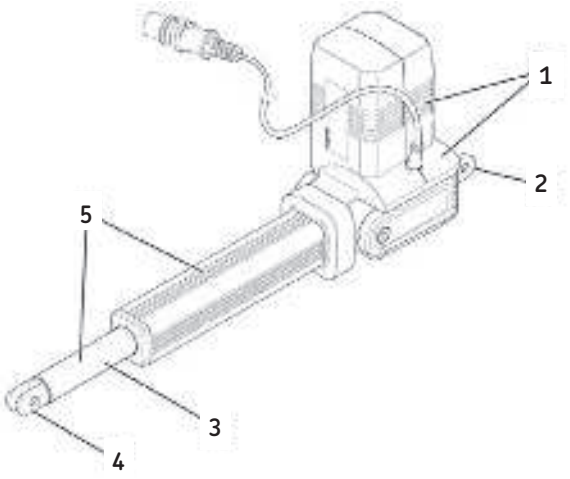


The actuator is implemented in an application and is exclusively forthe dynamic centric compression- or tensile-loaded lift.

The linear actuator consists of a motor part (**1**) and a linear unit(**5**), connected with each other by a bayonet joint.

The actuator consists of a direct current motor with worm gear which sets in motion a trapezoidal sliding spindle system with shaft joint (type B and C) or ball bearing spindle system (type A). Via the ball screw mount the trapezoidal sliding spindle or ball bearing spindle system transforms the rotation of the gear into a linear motion of the actuator (**3**).

The hinge head (**2**) and the fork head (**4**) transmit the actuator power to both sides of the application.

# 4.3 Special features

Fig. 8

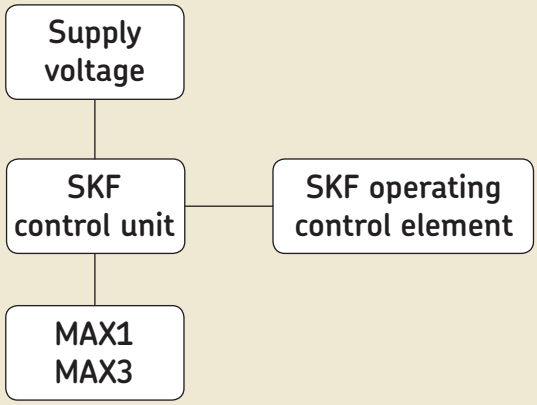


Fig. 9

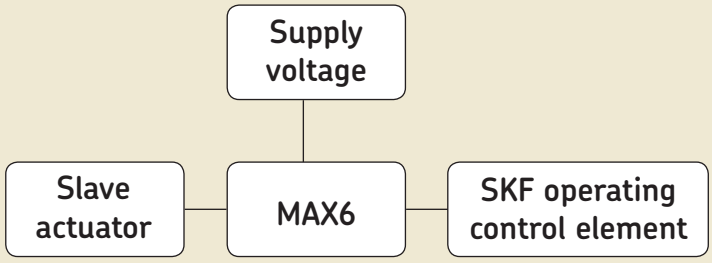


**Matrix MAX1 and MAX3**

The device requires an external control unit to power the motor unit. The control unit is connected to the device via a connecting cable. The SKF operating control element is also connected to the control unit, (→ **fig. 8**).

The difference between the linear actuators of Matrix MAX1 and MAX3 consists in the different outputs (→ *Chapter "Technical Data"*).

**Matrix MAX6**

The device does not require an external control unit. The control unit is integrated in the multi-shell plastic housing. To power the motor unit, the device is directly connected to the supply voltage via the power line connection. The SKF operating control element can also be connected directly to the device (→ **fig. 9**).

The Matrix MAX6 linear actuator can be used in a master actuator function with a second DC actuator (slave actuator) with jack plug (→ *Chapter "Options"*).

**Note!**
Additional differences between the Matrix MAX1, MAX3 and MAX6 linear actuators can be found in the appendix in the Chapters "Safety Features", "Connections", and "Data Sheets". (→ *Appendix*).

## 4.4 Construction group description

**Motor**

The motor is a 24-V-DC, whose motor shaft powers a worm gear. The lift speed depends on the load. The motor unit is surrounded by and fused with the multi-shell plastic housing. The plastic housing-cannot be opened. A bracket clasps around the plastic housing.

**Brake**

The brake is located in the motor unit and takes care of the deceleration of the spindle as well as the stabilization in idle mode.

The maximum self-preservation force of the brake in idle mode can be found in the respective data sheet (→ *Appendix*).

**Gear unit**

The worm gear is directly powered by the motor shaft, which depending on the version, moves a trapezoidal sliding spindle or ball bearing spindle.

**Linear unit**

The actuator extends and retracts the push tube. The actuator is surrounded and protected by the casing tube. The footer of the actuator is connected with the threaded spindle via the ball screw nut.

The linear unit is connected with the motor unit via a bayonet joint. The bayonet joint is protected by a plastic cover which also functions as a locking mechanism and which must not be removed.

## 4.5 Requirements for third party control units (mandatory in medical application)

Control units not approved by SKF for MAX1 and MAX3 actuators, are treated as third party control units.

**Note!**
It is strongly recommended to use original SKF controls for operation of the MAX1 and MAX3 actuators. If third party control are Used, there must be good documented evidence that the requirements listed below are complied with.

The secondary circuit of third party control units must be designed as an over voltage category 1 circuit. The third party control unit must be fitted with an overload safety cut-off. The maximum power input to the device should be only 0,5 A above the nominal value. The maximum shut-off value may be only 1 A above the nominal value.

For example: The maximum power consumption is 12 A. The recommended shut-off value is 12,5 A, the maximum cut-off value is 13 A.

**Note!**
The current cut-off has to be set differently if the main load direction is in pull mode. Consult the technical data or datasheet in this manual, for maximum power consumption values for each type

The third party control must enable the drive to draw currents up to 25 A for 200 ms after switching on (start-up current). The access power shut-off feature can also be temporarily de-activated for this purpose.

The operating voltage of the MAX1 and MAX3 actuators is 24–30 V DC. The no-load voltage of 36 V DC must not be exceeded. After the system has been installed , ensure electro-magnetic compatibility. The operating time and duty cycle of the MAX actuators may not be exceeded.

**Note!**
The third party power supply must have an isolation between the primary and secondary circuits according to 2 MOPP, and provide a non-grounded secondary circuit

Push-to-run operation (recommended): The actuator operates as long as the switch is pressed. If the device does not have signals to indicate operation, and depending on the application, it is recommended to ha an operational signal installed in the third party control unit.

## 4.6 Connections

Fig. 10

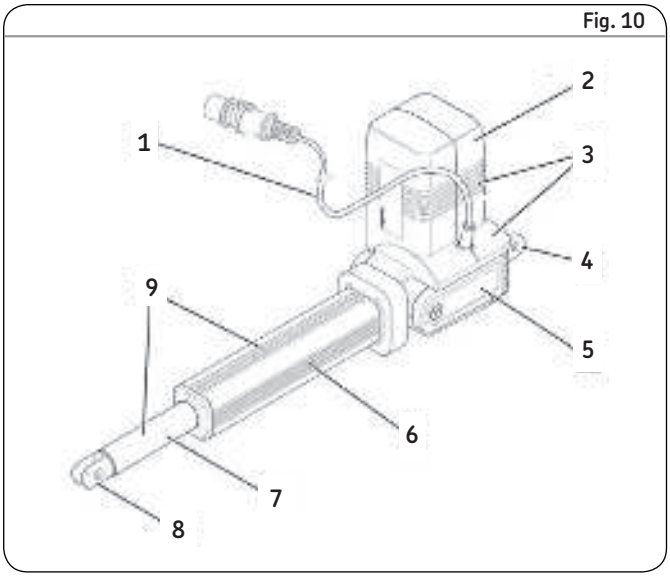


***Matrix MAX1 and MAX3***

***1*** *Connection to an external control (jack or DIN-8 plug)*
*A low voltage plug (**1**) connects the device to the power supply via an external SKF control.*

Fig. 11

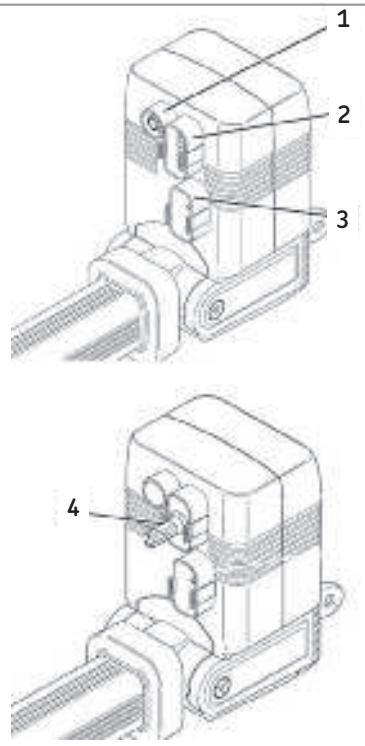


*Matrix MAX6*

*1 Connection slave actuator for jack plug (optional)**
*2 Connection to operation device (electric)*
*3 Connection power line*
*4 Connection to operation element (pneumatic)*

** → Chapter "Master-Slave Actuator Function"*

**Connection to operating element**

Depending on the version of the linear actuator the Matrix MAX6 is controlled via an electric (**2**) or pneumatic (**4**) (→ **fig. 11**) operating element (→ *Chapter "Operating Elements"*).

**Connection to power line**

The device is directly connected to the power supply via connection (**3**) (→ **fig. 11**).

# 4.7 Operating elements

**Matrix MAX1 and MAX3**

**Note!**
The device does not feature its own operating elements. The operation takes place via a SKF operating element at an external SKF control (→ *Separate operating manual*).

**Matrix MAX6**

**Note!**
The device does not feature its own operating elements. The operation takes place via an electric or pneumatic SKF operating element which is connected directly to the device (→ *Separate operating manual*).

# 4.8 Options

If not specified otherwise, the options listed here are available for the entire series of the Matrix linear actuator (MAX1, MAX3 und MAX6).

## 4.8.1 Emergency lowering device

The emergency lowering device (**1**) makes it possible to manually lower the application in case of an emergency (e. g. during power failure or motor malfunctions) (→ *Chapter "Operation"*).

Fig. 12

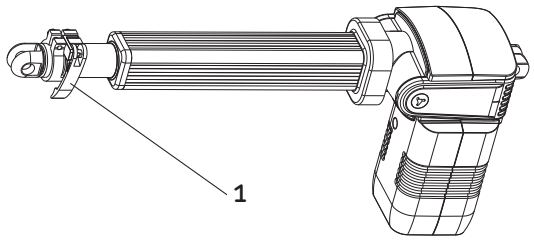


***Emergency lowering device***

***1*** *Release handle of the emergency lowering device*

## 4.8.2 Quick adjustment

In life-threatening situations (e. g. reanimation of a patient) the actuator can be adjusted manually with the quick adjustment function. This makes it possible to lower e.g. the back or foot wedge of a bed.

There are two options for a quick adjustment.

- Quick adjustment via knob
- Quick adjustment via Bowden cable

Fig. 13

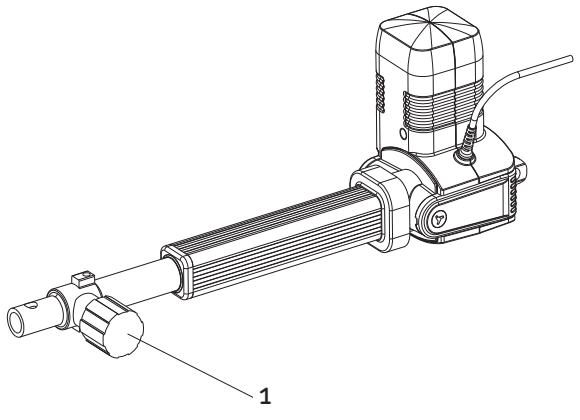


*Quick adjustment via knob (1)*

Fig. 14

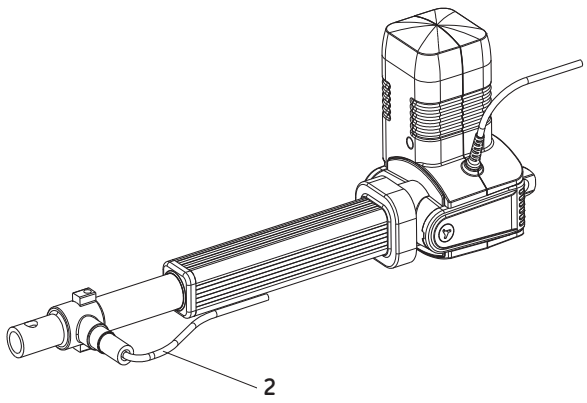


*Quick adjustment via Bowden cable (2)*

**Note!**
It is recommended that this option is not used in connection with an impulse transmitter. Additional information in conjunction with the quick adjustment feature (→ *Chapter "Operation"*).

## 4.8.3 Electrical pinch protection

**MAX3 and MAX6**

Fig. 15

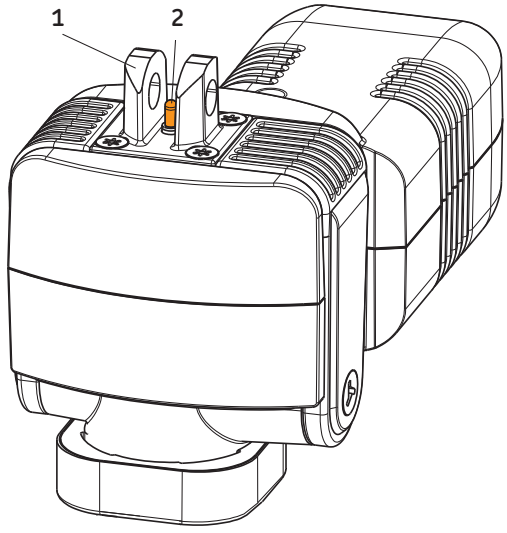


*Electrical pinch protection*

The electrical pinch protection consists of a hinge head with an elongated hole (**1**), an integrated control pin (**2**) and a micro switch, which turns off the device when it moves against the effective direction. In the event of a jam, the pin is lifted from the fastening bold and triggers the activation of the turn-off function.

If the linear actuator is used in the application as a pressure actuator (extending application), the electrical pinch protection only becomes effective if the upstroke is blocked by an object or a body part.

**No**
Additional information about the electrical pinch protection (→ *Chapter "Installation and First Start of Operation"*).

## 4.8.4 Life span display

**MAX1 and MAX3**

The life span display monitors the time of operation of the linear actuator. As soon as the calculated total run time has been reached for the direct current motor (in relation to the life span of the linear actuator), a visual or acoustic signal will be triggered depending on the respective version.

## 4.8.5 Mechanical pinch protection

The mechanical pinch protection uncouples the ball screw nut from the ball screw spindle in the event of a jam against the effective direction of the linear actuator.

If a linear actuator is utilized as a pressure engine (extending application) in the application, the mechanical pinch protection only works during the retraction of the device.

**Note!**
It is recommended that this option is not used in connection with an impulse transmitter.

## 4.8.6 Master slave actuator function

**MAX6**

The master-slave actuator function can operate a maximum of one additional actuator (e. g. MAX1, MAX3 or Telemag) directly via MAX6.

The second actuator (slave actuator) is controlled via additional buttons on the SKF operating element. A parallel operation is not possible.

This function is only available in conjunction with an electrical control unit.

Note the total power in the master-slave actuator function:
≤ 6 A (→ *Chapter 6.5.4*).

## 4.8.7 Impulse transmitter

**MAX1 and MAX3**

The impulse transmitter gives impulses which are further processed by the external control.

This provides the opportunity that the linear operation can be extended or retracted into one of more defined positions.

# 4.9 Accessories

| Accessories | Type series | Comments |
|---|---|---|
| SKF control | MAX1, MAX3 | |
| SKF operating element | MAX6 | Electrical or pneumatic operating element |
| Slave actuator | MAX6 | A linear actuator with a nominal voltage of 24 V DC and a connecting cable with jack plug, without integrated control and power supply, which is to be used in combination with a master actuator (→ **Chapter "Master Slave Actuator Function).** |
| Power cable | MAX6 | Country-specific power cables are not included and must be ordered separately. |
| Storage inserts for a hinge head and fork head | MAX1, MAX3, MAX6 | |
| Special tool (order no. 0125322) | MAX1, MAX3, MAX6 | For the dismantling of the power plug and the plug of the operating element. |

# 5 Transport, packaging and storage

## 5.1 Safety information for the transport

Improper transport

**⚠ CAUTION**

**Damage due to improper transport**
Significant material damage can occur in conjunction with improper transport.
Therefore:

- Proceed carefully during the unloading of the packaged items, during the delivery as well as during the transport to its final destination and comply with the symbols and information shown on the packaging.
- Only remove the actuator from its packaging right before installation.
- Note storage requirements for return transport to the manufacturer (→ Chapter “Storage”).

## 5.2 Transport inspection

The Matrix linear actuator is delivered as one packaged unit in a box or on pallets.
Check the delivery for completeness and damage due to transport immediately upon receipt.

**Check completeness of delivery:**

- A complete actuator unit.
  If cracks in the plastic casing were caused during the transport, the protection of accordance with IPX6S (squirt water) can no longer be guaranteed. The actuator must be sent back to the manufacturer.
- Installed cable and a low-voltage plug (depending on the version with jack or DIN-8 plug) for the MAX1 and MAX3 line.
- The storage inserts for hinge head and fork head.
- Accessories (optional).

Proceed as follows in conjunction with visible exterior transport damage:

- Do not accept delivery or do so only with reservations.
- Record scope of damage on the transport documents or on the bill of delivery of the shipping company.
- Initiate complaint.

**Note!**
Report any damage as soon as it has been recognized. Damage claims can only be asserted within the transporter's applicable complaint period.

## 5.3 Return transportation to the manufacturer

Proceed as follows for the return transport:

1 Dismantle the device if necessary (→ *Chapter Dismantling*).
2 Pack device in its original packaging. Follow storage conditions (→ *Chapter Storage*).
3 Send to manufacturer. The address is listed on the cover back.

## 5.4 Packaging

**For packaging**

The individual packaged pieces have been packaged appropriately according to the expected transport conditions. Only environmentally-friendly materials were used for the packaging.

The packaging is supposed to protect the individual components from damage caused by the transport, corrosion and other damage until they are ready for installation. Therefore, do not destroy the packaging and only remove it shortly prior to the installation. Keep packaging for possible return shipment to the manufacturer (→ *Chapter 5.3*).

If the packaging is to be disposed off, please note and adhere to the following:

Handling of packaging materials

**⚠ CAUTION**

**Environmental damage due to incorrect disposal**
Packaging material consists of valuable raw materials and in many cases they can be sensibly recycled and reused.

Therefore:
- Dispose of packaging material in an environmentally correct way.
- Comply with locally applicable disposal regulations.

## 5.5 Storage

Pack the device in its original packaging for storage.

- Do not store outside.
- Dry and dust-free storage.
- Keep away from any aggressive media.
- Protect from UV radiation.
- Avoid mechanical vibrations.
- Storage temperature: –20 to 40 °C.
- Relative atmospheric humidity: max. 95% (no build up of condensation).
- For storage for longer than three months, check the general condition of all parts of the packaging on a regular basis. If necessary, refresh or renew the conservation.

**Note!**
It is possible that there are notices on the packaging concerning the storage, which go beyond the requirements listed here. Follow those accordingly.

# 6 Installation and first operation

**Authorized personnel**

- The installation and first start of operation may only be conducted by specially trained experts.
- Work on the electric system may only be performed by trained electricians.

**⚠ WARNING**

**Electric shock and moving parts hazards**
Serious injury or death can be caused by touching live electrical components and by unexpected movement of the actuator.
**Be sure the system's power supply is off and actuator is locked out before installing.**



**Electrical equipment**

**⚠ WARNING**

**Danger if restarted without authorization**
When correcting faults there is danger of the energy supply being switched on without authorization. This poses a lifethreatening hazard for persons in the danger zone.

Therefore:

- Prior to starting work switch off the system and safeguard it from being lockout.



**Safeguarding against restart**

**⚠ WARNING**

**Risk of injury and material damage due to incorrect installation of the optional devices**

Therefore:

- Optional devices, in particular components that are part of a retrofitting, may only be installed in accordance with the respective instructions (circuit diagram).
- The electromagnetic compatibility must be tested for the routing and appropriate measures must be carried out if necessary.



**Optional devices**

**⚠ WARNING**

**Special precaution regarding EMC**
The device requires special precautions regarding EMC and must be installed and put into service according to the EMC information provide in this operating manual (→ *Safety, Chapter 2.8*)

## 6.1 Installation location

Adhere to the technical data in accordance with operating conditions (→ *chapter 11 Appendix*).
- Install in a location where the actuator is not exposed to strong UV radiation or corrosive or explosive air media.

## 6.2 Inspections prior to first operation

- Execution by professional electrician

Prior to the first operation, a professional electrician must perform and document the following tests and readings:

- Check visual condition
- Function check of operating features and safety features
- Reading of protective conductor resistance
- Reading of leakage currents
- Reading of insulation resistance

**Note!**
Additional information concerning inspections and readings (→ *Chapter Maintenance*).

**⚠ WARNING**

**Crush hazard**
Risk of damage to the linear actuator MAX caused by static and dynamic overload. Do not use the actuator beyond the permissible operating data.

- Note the maximum permissible operating data in the datasheet.
- Note the product label of the actuator (end warning box)

Before initial start-up, check that the following point have been dealt with:

- All instructions followed, in above sections of this chapter
- grounding conductor resistance and substitute leakage currents checked according threshold of owner usage.
- No impermissibly high side -acting forces impacting on the guide tube unit.
- Entire stroke area unobstructed so that linear actuators cannot be driven onto a fixed object.
- All cables secured against pinching and trapping, and properly connected
- Electrical supply secured
- Operating device connected to the control unit.

**Initial start-up**

After the installation check has been completed, you can start up the linear actuators MAX: with the LED on the operating light green, press the corresponding operating button of the operating device. Prior to first operation, a professional electrician must perform and document the following tests and readings:

- Visual condition check
- Functional check of operating features and safety features
- Reading of leakage currents
- Reading of insulation resistance

**Note!**
Additional information concerning inspections and readings. (→ *Maintenance, chapter 8*) .

# 6.3 Installation

- Execution by qualified personnel

**⚠ WARNING**

**Risk of injury and material damage due to manipulation of the screws on the device**
Manipulation or loosening of the screws on the device or on the options may lead to injuries and material damage during the operation.

Therefore:
- Never loosen screws on the device or the options.

The Matrix linear actuator is attached to two elements via the fork head and the hinge head.

**1** Secure elements of the application in between which the linear actuator will be inserted.

**2** Insert storage inserts (**1**) at the fork head (**2**) and the hinge head, if necessary.

**Fig. 16**

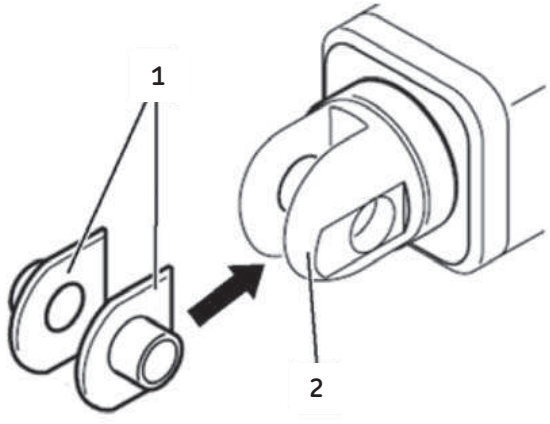


**Note!**
The storage inserts that are part of the delivery can be installed in the following cases:

- For a bolt diameter of 10 mm
- To reduce electro-magnetic charging
- As an electric insulation
- As an optimization of the storage place, so that metal doesn't rub on metal

3 Connect the fork head (**1**) and the hinge head (**2**) and the elements of the application with the fastening bolts.

Fig. 17

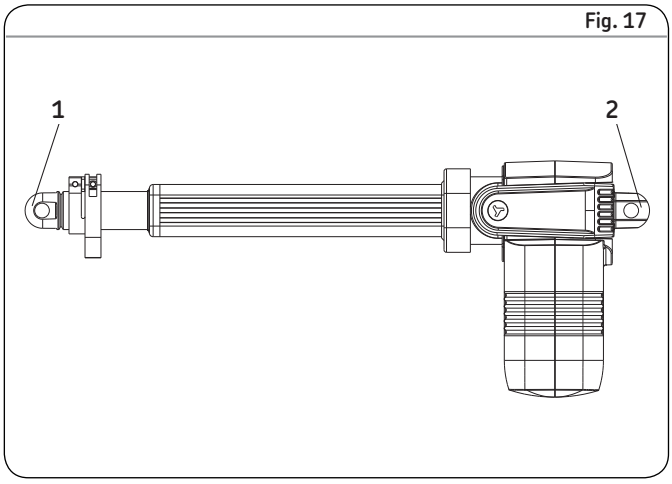


**Note!**
Information concerning the dimensions of the drill holes for fastening bolts can be found in the respective data sheets. (→ *Appendix*).

**⚠ WARNING**

**Risk of injury and material damage due to insufficient fastening!**
Only use fastening bolts and secure them adequately. Do not use screws to install. Never loosen or otherwise manipulate screws on actuator or options.

4 Ensure that the applied force is always centrically directed on the actuator. (→ **fig. 18**).

Fig. 18

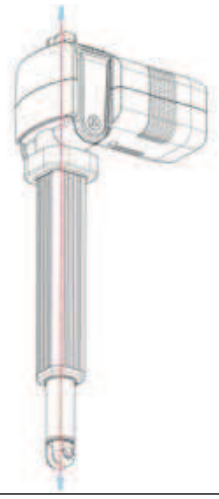

**⚠ WARNING**

**Risk of injury and material damage due to incorrect installation!**
During installation, do not subject the actuator to side-impact or to turning forces.

5 Ensure that the linear actuator is not impacted in its movement over the entire stroke area. Consider collision tests of the application.
6 Ensure that the motor cable cannot be squeezed, clamped or pulled.
7 Connect linear actuator to control unit if necessary (→ *Chapter "Connection to the Control Unit"*).
8 Connect linear actuator to operating element (→ *Chapter "Connection to Operating Element"*).
9 Connect linear actuator to power supply. (→ *Chapter "Connect to Power Supply"*).
10 Ensure that the power plug is accessible at all times.
11 Ensure that none of the supply or control cables can be pinched by the kinematics of the application or by the linear actuator during the extension or retraction.
12 Ensure that the installation requirements of the options have-been adhered to (→ *Chapter "Requirements Concerning the Installation of the Actuators with Options"*).
13 Affix prohibition and warning labels for the application onto the linear actuator, if necessary (→ *Chapter "Warning labels"*).

## 6.4 Connection to the control unit

All control units which are not approved for the Matrix devices by SKF AG are treated as third party controls.

**⚠ CAUTION**

**Material damage due to third-party control unit**
The use of a third-party control unit may lead to material damage. In conjunction with the use of a third-party control unit, the manufacturer does not assume any liability for damage that may be caused

Therefore:
- It is recommended to use the SKF control unit from the manufacturer.
- When using the third-party control unit, the requirements stipulated for the third-party control unit must be adhered to (→ *Requirements for third party control units in the appendix*).

**Connect MAX1 and MAX3 to the control**

**Note!**
A low-voltage plug connects the device to an external control unit. Adhere to the instructions of the operating manual of the SKF Control unit during the connection process.

Depending on the version, the low-voltage plug has been fitted with a jack or DIN-8 plug.
- Special tools required:
  - Special tool from the manufacturer (part no. 0125322)

**1** Check the sealing ring of the jack plug (*arrow*) and the plug for damage.

Fig. 19

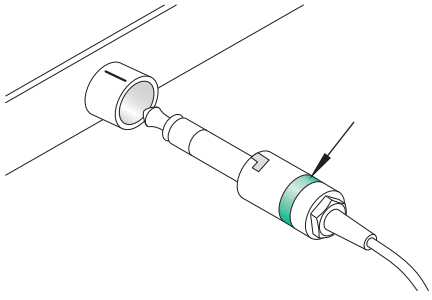

***Connect jack plug to control unit***

**Note!**
Damaged sealing rings and twisted plugs can no longer guarantee protection pursuant to IPX6S. They have to be replaced by the manufacturer (→ *Chapter "Transport inspection"*).

2 Sealing ring with Klübersynth VR 69-252 (part no. 0118037), lightly lubricate.

**⚠ CAUTION**

**Damage due to wrong lubricants**
The use of incorrect additives may cause significant material damage.

Therefore:
- Only use the auxiliary products listed by the manufacturer.

3 Insert jack plug with bayonet joint (**2**) into the connecting socket (**1**) of the control unit.
Ensure correct positioning of the groove (**3**).

Fig. 20

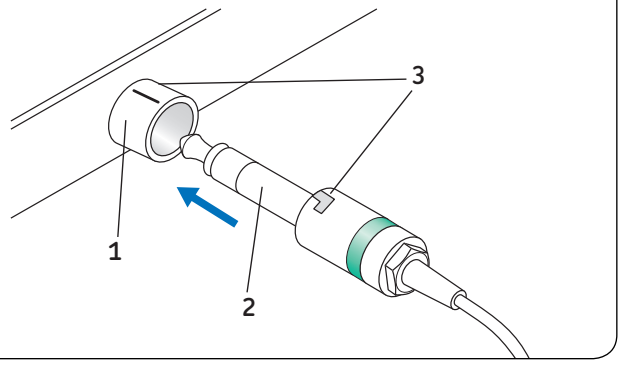


Fig. 21

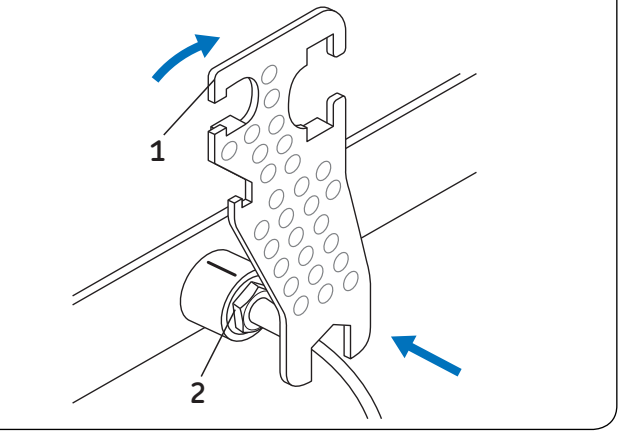


4 Insert special tool (**1**) in the nut (**2**) of the jack plug.
5 Turn special tool (**1**) clockwise until the bayonet joint of the jack plug is locked.

**Connect DIN-8 plug to control unit.**

The insertion position is dictated by the geometric shape of the plug. The strain relief for this system is provided via attached components of the respective SKF control unit casing.

**1** Check the sealing ring of the DIN-8 plug (arrow) and the plug for damage.

Fig. 22

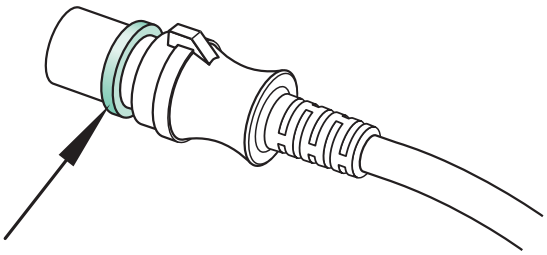

**Note!**
Damaged sealing rings and twisted plugs can no longer guarantee protection pursuant to IPX6S. They have to be replaced by the manufacturer (→ *Chapter "Transport inspection"*).

**2** Sealing ring (arrow) with Klübersynth VR 69-252 (part no. 0118037), lightly apply lubricant.

**⚠ CAUTION**

**Damage due to wrong lubricants**
The use of incorrect additives may cause significant material damage.

Therefore:
- Only use the auxiliary products listed by the manufacturer.

**3** Insert DIN-8 plug (**3**) into the connecting socket (**1**) of the control unit. Ensure correct positioning of the groove (**2**) and the lug (**4**).

Fig. 23

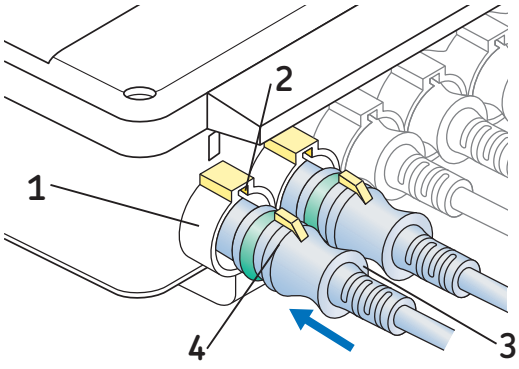

## 6.5 Connection to operating element

**⚠ WARNING**

**Risk of injury and material damage due to third party operating element**

The use of a third party operating element may lead to significant injuries or material damage.

In conjunction with the use of a third-party operating element, the manufacturer does not assume any liability for damage that may be caused.

Therefore:

- Only use the manufacturer's SKF operating element.

### 6.5.1 Connect MAX1 and MAX3 to operating element

**Note!**

The device is connected to the operating element via an external control. (→ *Separate operating manual of the control and the operating element*).

### 6.5.2 Connect MAX6 to operating element

**Note!**

The device is connected directly to an electric or pneumatic operating element. Adhere to the operating instructions for the operating elements in regard to the connection (→ *Separate operating manual*).

**Connect the device to electric operating element:**

**1** Check sealing rings (arrows) of the operating element plug and the plug for damage.

Fig. 24

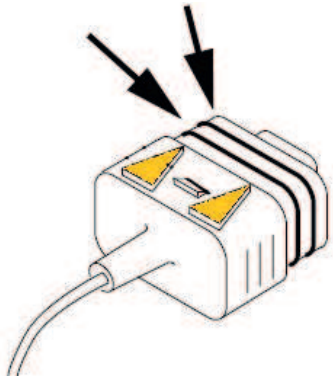

**Note!**
Damaged sealing rings and twisted plugs can no longer guarantee protection pursuant to IPX6S. They have to be replaced by the manufacturer (→ *Chapter "Transport Inspection"*).

**2** Sealing rings (arrow) with Klübersynth VR 69-252 (part no. 0118037), lightly apply lubricant.

**⚠ CAUTION**

**Damage due to wrong lubricants**
The use of incorrect additives may cause significant material damage.

Therefore:
- Only use the auxiliary products listed by the manufacturer.

3 Connect plug (**1**) to the connection of operating element (**2**) of the device. Ensure the correct position of the arrows (**3**) on the plug and on the outlet.

Fig. 25

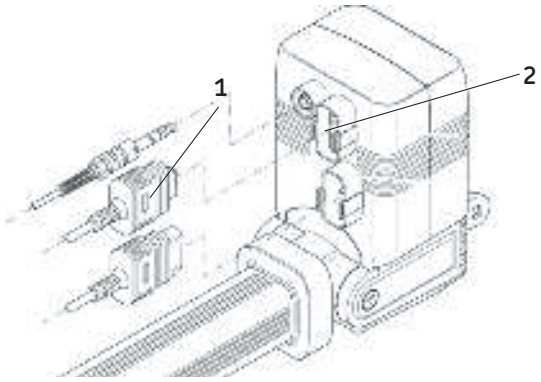


Fig. 26

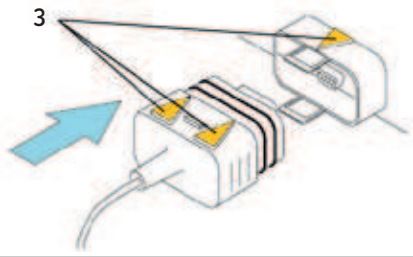


4 Press plug (**1**) down into the connection socket until the snaps (**2**) lock into place on both sides.

Fig. 27

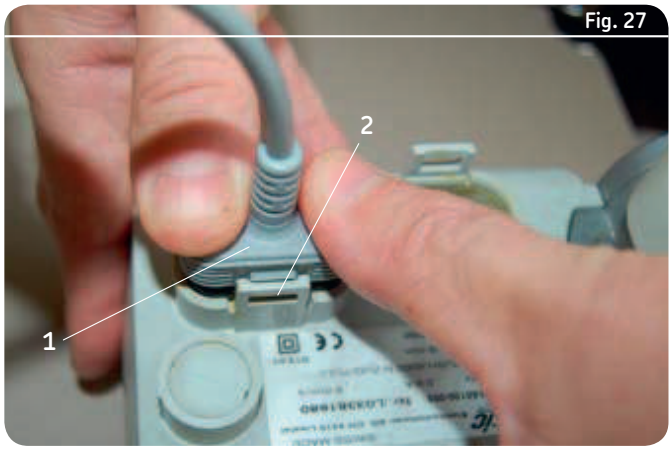


5 Ensure that both sides are mechanically locked and sealed.
6 Connect operating element to power supply. (→ *Separate operating manual*).

**Co**

**1** Check gear pins of pneumatic control line for damage.

Fig. 28

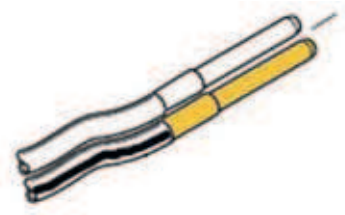

**2** Insert gear pins (**1**) into the bore holes of the rubber fitting (**2**).

Fig. 29

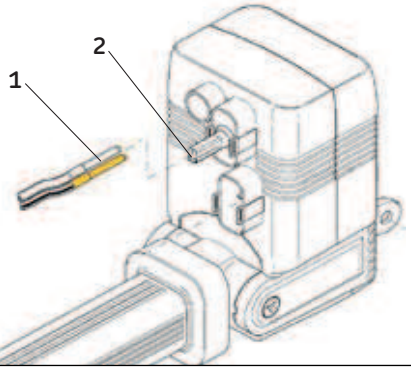


Ensure that the marking on the rubber fitting (**1**) aligns with the marking on the pneumatic line (**2**).

Fig. 30

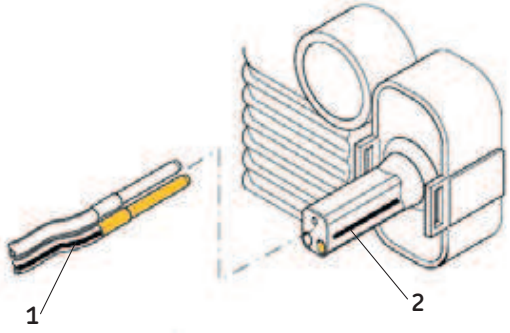


**Note!**
If the connection has been switched, the linear actuator moves in the opposite direction of the arrows on the operating element.

# 6.6 Connect to power supply

**DANGER**

**Electrical shock hazard**
Incorrect installation can result in serious injuries, death or damage. Only professional electricians should work on electrical systems.



**Electrical equipment**

## 6.6.1 Connect MAX1 and MAX3 to power supply

**Note!**
A control unit connects the device to the electric power supply via a low voltage plug. Adhere to the instructions of the operating manual for the control unit during the connection process.

1 Connect linear actuator to control unit (→ *Chapter "Connection to the Control Unit"*).
2 Connect control to electric grid (→ *Separate operating manual for control*).
3 Ensure that the plug of the power line is accessible at all times.

## 6.6.2 Connect MAX6 to energy supply

1 Check the sealing rings (arrows) of the power ine plug and the plug for damage.

Fig. 31

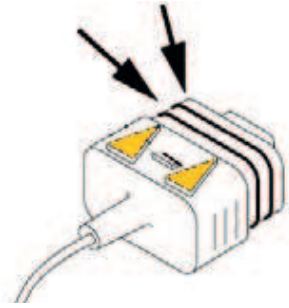

**Note!**
Damaged sealing rings and twisted plugs can no longer guarantee protection pursuant to IPX6S. They have to be replaced by the manufacturer (→ *Chapter "Transport Inspection"*).

2 Sealing rings (arrow) with Klübersynth VR 69-252 (part no. 0118037), lightly apply lubricant.

**⚠ CAUTION**

**Damage due to wrong lubricants**
The use of incorrect additives may cause significant material damage.

Therefore:
- Only use the auxiliary products listed by the manufacturer.

Fig. 32

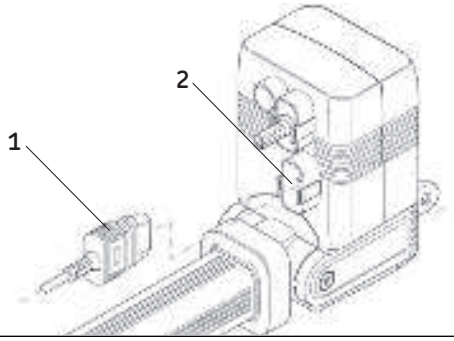


3 Connect plug of the electric cord (**1**) to the co nection of the power line (**2**) of the device.
Ensure the correct position of the arrows (**3**) on the plug and on the outlet.

Fig. 33

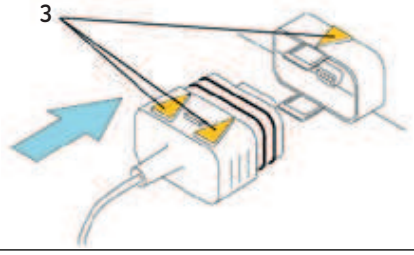

4 Press plug (**1**) down into the connection socket until the snaps (**2**) lock into place on both sides.

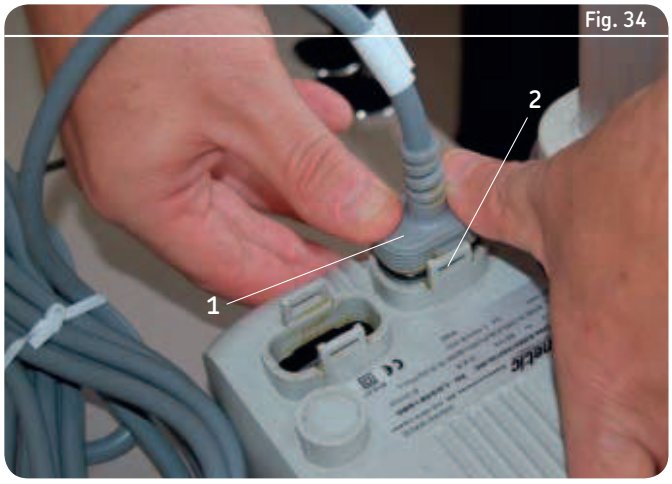

Fig. 34

5 Ensure that both sides are mechanically locked and sealed.
6 Connect electric cord to power supply.
7 Ensure that the plug of the power line is accessible at all times.

# 6.7 Requirements concerning the installation of the actuators with options

## 6.7.1 Emergency lowering device

**Note the following during the construction of the application kinematics:**

- When the linear actuator is retracted, a distance of at least 25 mm must remain between the mechanism of the emergency lowering device (**1**) and the casing tube (**2**).
- There must be sufficient room in the area of the emergency lowering device in the application, so that the release handle (**3**) can be operated easily.

Fig. 35

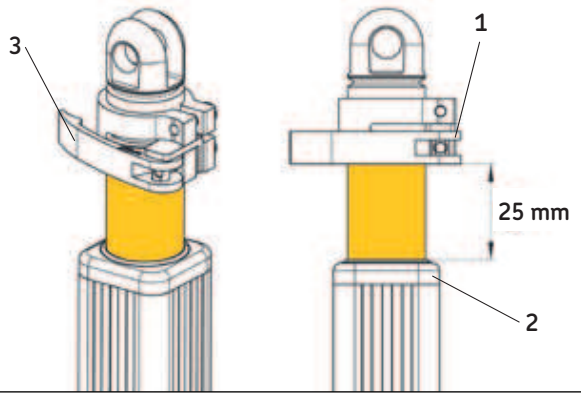


- The operating label for the emergency lowering device “Emergency/ Notfall” (parts no. 0112420) must be easily visible and permanently affixed on the actuator or the application.

Fig. 36

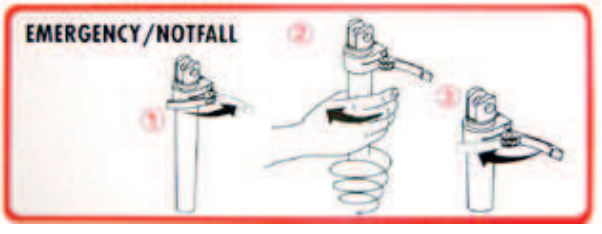

## 6.7.2 Quick adjustment

**Note the following during the construction of the application kinematics:**

- In the application there must be enough room in the area of the knob (**1**) or the Bowden cable (**2**), so that the two elements can be operated easily.

Fig. 37

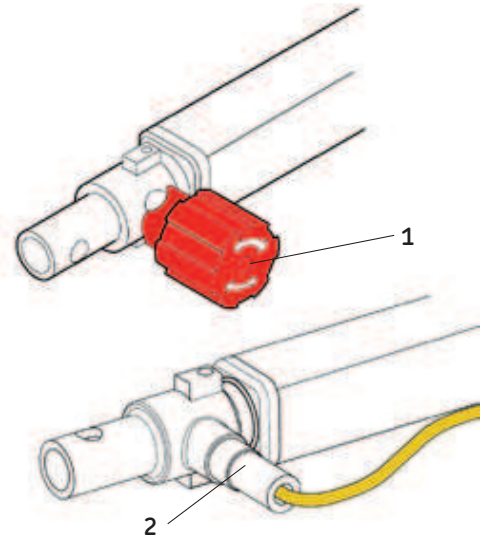


- The Bowden cable between the linear actuator and the operating element has to be installed so that it is not pinched or affected by the movements of the linear actuator.

## 6.7.3 Electrical pinch protection

**Note the following during the installation of the linear actuator with electric pinch protection.**

- The gear pin (**2**) at the hinge head (**1**) may not be jammed.
- Use fastening bolts with ∅12 h7 for the mounting of the hinge head.

Fig. 38

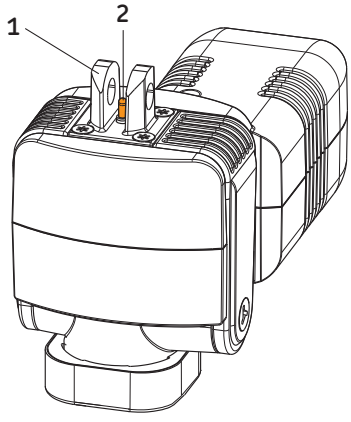

- Ensure after the installation that the installed linear actuator can be moved inside the elongated hole (**2**) of the hinge head (**1**).

Fig. 39

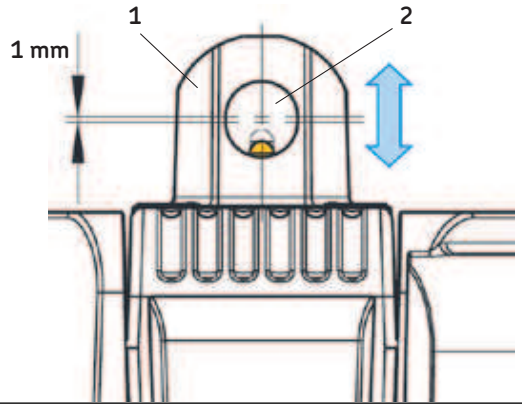


## 6.7.4 Mechanical pinch protection

Adhere to the larger installation measures for the use of a linear actuator with pinch protection. (→ *Data sheets for linear actuator and accessories in the appendix*).

## 6.7.5 Master-slave actuator function

The master-slave actuator function features an additional actuator (slave actuator) which is connected to the Matrix MAX6 linear actuator via a jack plug (e. g. Matrix MAX1 or MAX3). Note the following during the connection:

- Only one linear actuator with a power supply voltage of 24 V DC may be connected.
- When both actuators (master actuator and slave actuator) run together, the total power may not exceed 6 A

**Connect slave actuator to Matrix MAX6**

- Special tools required:
  – Special tool from the manufacturer (part no. 0125322)

**1** Check sealing ring of jack plug (arrow) and the jack plug of the slave actuator for damage.

Fig. 40

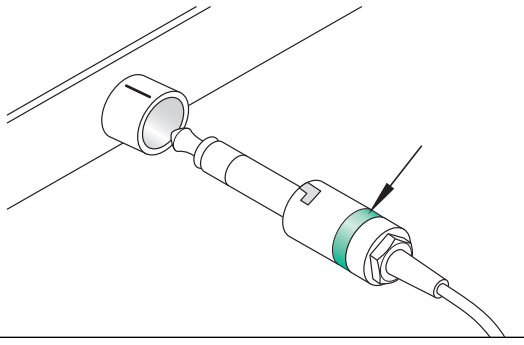

**Note!**
Damaged sealing rings and twisted plugs can no longer guarantee protection pursuant to IPX6S. They have to be replaced by the manufacturer (→ *Chapter "Transport Inspection*).

2 Sealing ring (arrow) with Klübersynth VR 69-252 (part no. 0118037) lightly apply grease.

**⚠ CAUTION**

**Damage due to wrong lubricants**
The use of incorrect additives may cause significant material damage.

Therefore:
- Only use the auxiliary products listed by the manufacturer.

3 Insert jack plug with bayonet joint (**1**) into the connecting sockets (**2**) of the device (→ **fig. 41**).
Ensure correct positioning of the groove (**3**) (→ **fig. 42**).

Fig. 41

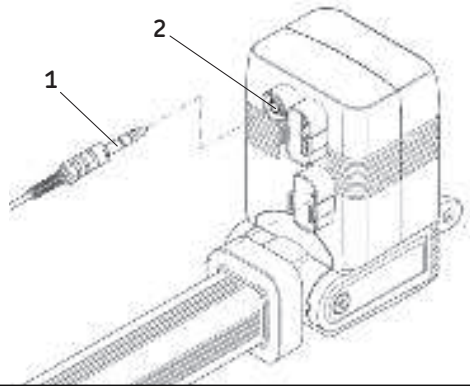


Fig. 42

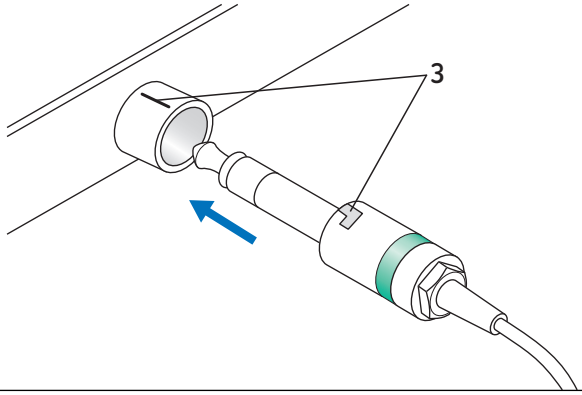

4 Insert special tool (**1**) in the groove (**2**) of the jack plug.
5 Turn special tool (**1**) clockwise until the bayonet joint of the jack plug is locked.
6 Connect slave actuator to energy supply. (→ *Chapter "Connect to Power Supply"*).

Fig. 43

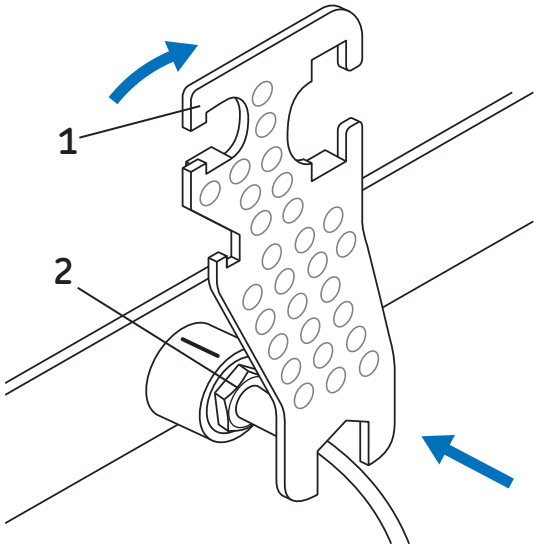

# 7 Operation

## 7.1 Safety

**⚠ DANGER**

**Risk of crushing**
While moving onto solid objects, the force of the device may cause injuries.
Therefore:

- Ensure that there are no persons in the stroke area of the device while in operation.
- Take note of maximum permissible operating data for the device (→ *Data sheets in Chapter 11 Appendix*).
- Never tamper with the elements that are connected to the device while the device is in operation.

**⚠ CAUTION**

**Risk of injury through contact with the fork head**
Therefore:

- Do not let objects or body parts come in contact with the fork head of the actuator.

**⚠ CAUTION**

**Material damage due to static and dynamic overload of the device**
Static and dynamic overload can lead to damage and failure of the device.
Therefore:

- Adhere to maximum permissible operating data for the device (→ *Data sheets in the Appendix*).
- Never exceed nominal load.
- Never tamper with the elements that are connected to the device while the device is in operation.

**⚠ CAUTION**

**Actuator may be damaged if liquids penetrate the actuator during extension and retra eep liquids away.**

**⚠ CAUTION**

**Material damage through overheating**
An overheating of the device can cause damage.
Therefore:

- Only use control integrated thermal switch.
- Never exceed nominal load.
- Always adhere to idle times and operating times. (→ *Chapter "Technical Data"*).

## 7.2 Turn on

**Note!**
The device does not feature its own operating control elements. The operation takes place via a separate operating element (→ *Separate operating manual*).

## 7.3 Turn off

**Note!**
The device does not feature its own operating elements. The operation takes place via a separate operating element (→ *Separate operating manual*).

# 7.4 Action before use

**1** Ensure that there are no persons or objects in the stroke area of the device.

**For options:**

**2** Ensure that the release handle of the emergency lowering device (**1**) is closed until it touches the arrester or that the mechanism of the quick adjustment is locked. (→ *Chapter "Operate Emergency Lowering Device"*).

**Fig. 44**

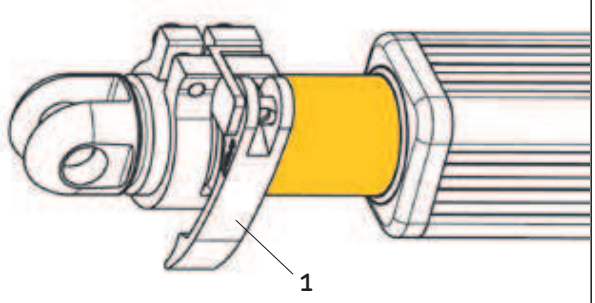


**3** Ensure that the mechanism of a quick adjustment (**1**) is locked (→ *Chapter "Operate Quick Adjustment"*).

**Fig. 45**

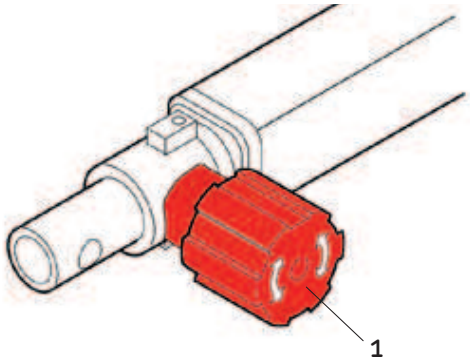

# 7.5 Action during operation

## 7.5.1 Normal operation

During the normal operation, the linear actuator lifts and lowers the elements that are connected with the Matrix linear actuator via the fork head and hinge head.

The linear actuator is directly controlled by a directional buttons of an SKF operating element.

The linear actuator extends or retracts as long as the directional button is being pressed or until and the linear actuator is completely extended or retracted.

- Button UP: The linear actuator MAX extends
- Button DOWN: The linear actuator MAX retracts

The operating device (ex. hand switch, foot switch) is a green LED indicating normal operation.

Unless it is otherwise apparent to the operator from the normal operating position, indicator lights shall be provide to indicate that medical equipment is ready for normal use

**Note!**
Additional information for the operation of the linear actuator (→ *Separate operating manual for the operating element*).

## 7.5.2 Operate emergency lowering device

During a power failure or malfunction of the actuator, the load can also be lowered manually through turning.

**⚠ CAUTION**

**Material damage due to incorrect operation of the emergency lowering device!**
Incorrect operation may lead to material damage.
Therefore:

- Only operate the emergency lowering device in an emergency or to test the function.

To engage the emergency lowering device, proceed as follows:

**1** Open release handle (1).

Fig. 46

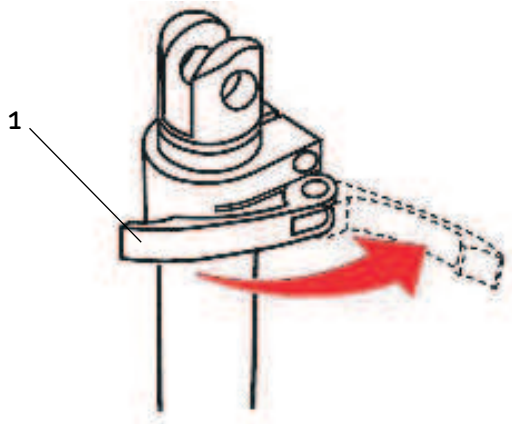


**2** Turn actuator (**2**) clockwise toward the arrow. The actuator moves downward. The required manually applied force depends on the load.

Fig. 47

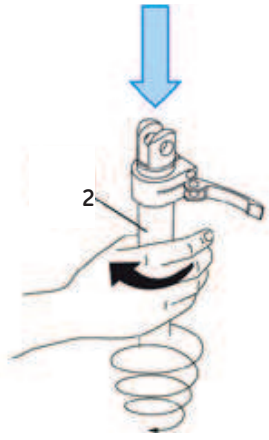


**⚠ CAUTION**

**Risk of crashing and material damage due to an unintended lowering**

Unintended lowering while carrying a load may cause injuries and material damage.

Therefore:

- Immediately stop the operation in the event of excessive exertion of force or independent lowering and initiate repairs through the manufacturer.

3 Little oppositionists reached, close the release handle (**3**) all the way to the arrester.

Fig. 48

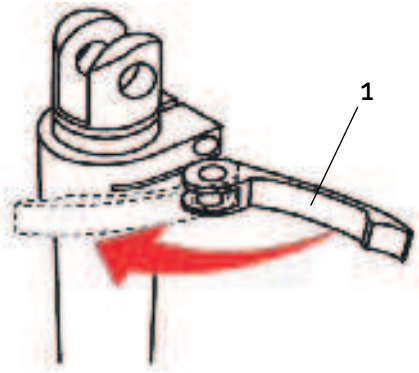


## 7.5.3 Operate quick adjustment

**⚠ CAUTION**

**Material damage due to incorrect operation of the quick adjustment function**

Incorrect operation may lead to material damage.

Therefore:

- Only operate the quick adjustment function in an emergency or to test the function.

**Adjust actuator with the button**

**1** Turn button (**1**) by 90° and unlock.

Fig. 49

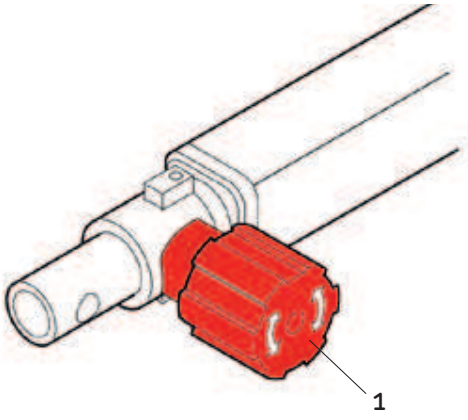

2 Ensure that the head (**1**) is in position (**2**).
3 Manually retract actuator (**3**).

Fig. 50

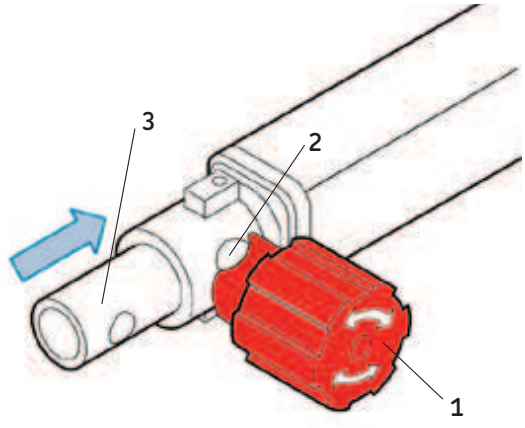


**⚠ CAUTION**

**Risk of crashing and material damage due to an unintended lowering**

Depending on the construction and the load, the linear actuator can be quickly retracted. Unintended lowering while carrying a load may cause injuries and material damage

Therefore:

- The part of the application that is to be lowered (e. g. head and foot piece in a bed) must be retained at all cost during the lowering.
- In its retracted position of the application, the portion that is to be lowered must rest on a solid arrester (e. g. bed frame).

4 Turn button (**1**) by 90° again and unlock

**Adjust speed of the lowering device.**

1 The speed of the lowering device may be adjusted via two opposing adjusting screws (**1**).

Fig. 51

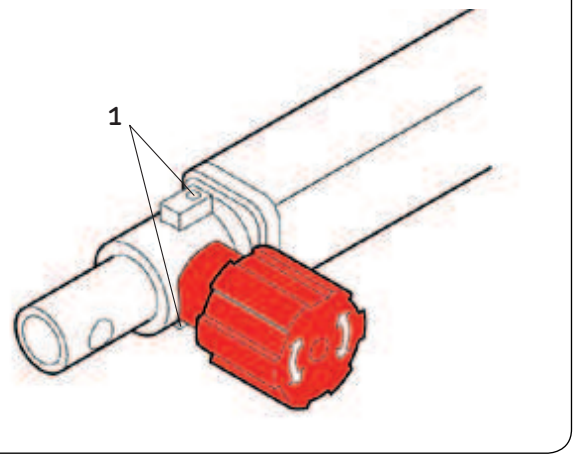


**⚠ CAUTION**

**Material damage**

The adjusting screws are not secured and can be entirely unscrewed and can therefore be lost.

Therefore:

- Do not completely unscrew adjusting screws.

**Adjust actuator with Bowden cable**

For adjustments via the Bowden cable, the Bowden cable (**1**) is operated via an operating element on the application.

Fig. 52

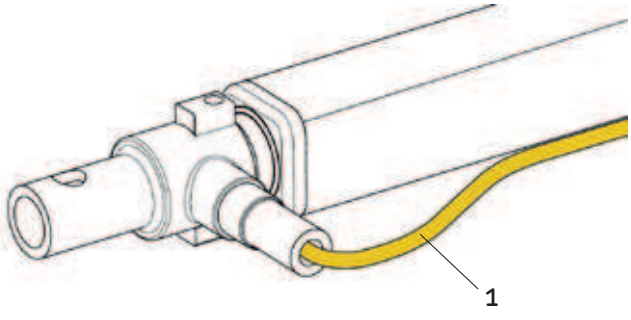

# 7.6 Disengagement in case of emergency

In hazardous situations, all movements of the device must be stopped as quickly as possible and the power supply must be turned off.

**Proceed as follows in hazardous situations:**

1 Immediately engage emergency shut-off, if present, or cut off power for actuator (→ *Chapter "Shut down MAX1 and MAX3", "Shut down MAX6"*).
2 Evacuate people from the hazard zone, initiate first aid measures.
3 Notify doctor and fire department, if necessary.
4 Notify responsible person on-site.
5 Keep access paths open for rescue vehicles.Order specialized staff to repair malfunction.
6 Based on severity of emergency, notify the authorities if necessary.
7 Order specialized staff to repair malfunction.

**⚠ WARNING**

Do not restart until all persons are outside the hazard zone. Check the device and application that uses the device prior to restarting the operation and ensure that all safety equipment is installed and fully functional

8 Check the device and application that uses the device prior to restarting the operation and ensure that all safety equipment is installed and fully functional.

## After rescue measures

## 7.6.1 Shut down MAX1 and MAX3

1 Pull the power line plug of the control unit out of the power outlet.
2 Pull the low-voltage plug (Jack plug or DIN-8 plug) of the cable of the device out of the connecting socket of control unit (→ *Refer to paragraph below*).

**Pull jack plug out of control unit**

Proceed as follows to pull jack plug out of the connection outlet of the control unit:

- Special tools required:
  – Special tool from the manufacturer (part no. 0125322)

1 Insert special tool (**1**) in the groove (**2**) of the jack plug.
2 Turn special key (**1**) counter-clockwise until the bayonet joint of the jack plug is unlocked.

Fig. 53

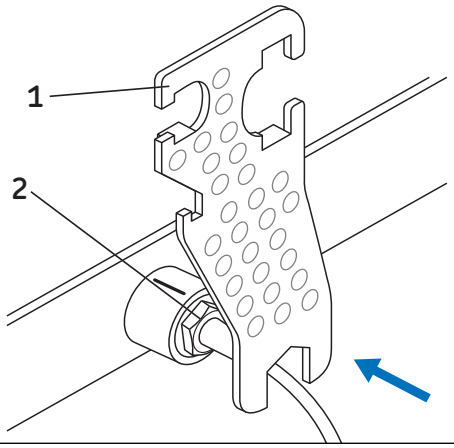


3 Pull jack plug (**1**) out of the connection outlet (**2**) of the control unit (arrow).

Fig. 54

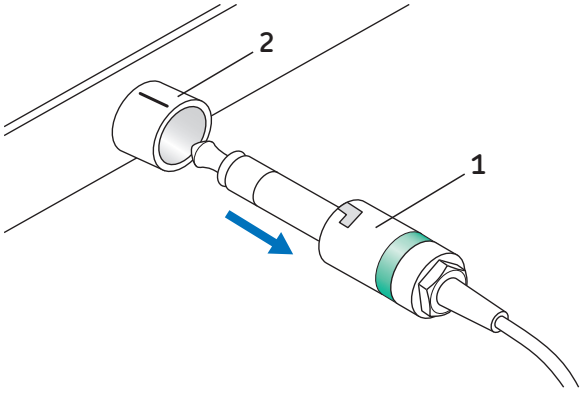

### 7.6.2 Shut down MAX6

**1** Pull the power line plug (connected with connection (**1**) out of the power outlet.

Fig. 55



## 7.7 Action after use

Separate the actuator from the power supply.

# 8 Maintenance

**Personnel**

- The maintenance work described herein can be performed by the operator unless otherwise indicated.
- Some maintenance tasks should only be executed by especially trained, qualified personnel, or exclusively by the manufacturer; specific reference will be made in each case in the description of the respective maintenance task.
- Only professional electricians should perform work on the electrical equipment.

**⚠ DANGER**

**Electrical shock hazard**
Incorrect installation can result in serious injuries, death or damage. Only professional electricians should work on electrical systems.



**Electrical equipment**

**⚠ DANGER**

**Danger if restarted without authorization**
When correcting faults, there is danger of the energy supply being switched on without authorization. This poses a lifethreatening hazard for persons in the danger zone.
Therefore:

- Prior to starting work, switch off the system and safeguard it from being lockout.



**Safeguarding against restart**

# 8.1 Maintenance plan

Maintenance tasks that are required for optimal and trouble-free operation are described in the sections below.

If increased wear is detected during regular inspections, shorten the required maintenance intervals according to the actual indications of wear.

**Linear actuator Matrix maintenance plan**

| Interval | Maintenance work | To be carried out by |
|---|---|---|
| **Daily** | Check actuator for visible damage (→ *Chapter "Check of Visual Condition"*). | Operator |
| | Clean off dust and dirt if necessary (→ *Chapter "Cleaning"*). | Operator |
| **Monthly** | Function check of operating features and safety features (→ *Chapter "Inspections and Readings"*). | Qualified personnel |
| | Check tight fit of the device to the fork head and hinge head, correct it if necessary Check connection for tight fit. | Qualified personnel |
| **Annually** | Reading of protective conductor resistance (→ *Chapter "Inspections and Readings"*). | Professional electrician |
| | Reading of leakage currentsn (→ *Chapter "Inspections and Readings"*). | Professional electrician |
| | Reading of insulation resistance (→ *Chapter "Inspections and Readings"*). | Professional electrician |
| | Check labels and warning notices for damage and replace if necessary. | Qualified personnel |
| | Check plug for tight fit. | Professional electrician |
| | Check sealing O-rings for damage (→ *Chapter "Check Sealing Funktion of Plug"*). | Professional electrician |
| **Definition through the processor** | Conduct visual inspection of the condition of the permanent safeguard and the routing of the supply and control cable within the application. Cable routing elements may not be loose or broken. | |
| | Options | |
| **Semi-annually** | Check options for visible damage | Qualified personnel |
| | Check functionality of emergency lowering device under nominal load (→ *Chapter "Check Options"*). | Qualified personnel |
| | Check functionality of electric pinch protection under nominal load (→ *Chapter "Check Options"*). | Qualified personnel |
| | Check functionality of quick adjustment (→ *Chapter "Check Options"*). | Qualified personnel |

**Note!**
If the linear actuator is used outside of the environmental conditions specified earlier in this manual, check such components once a month for any changes such as oxidation or sedimentation.

# 8.2 Maintenance work

## 8.2.1 Cleaning

To be performed by operator

**⚠ CAUTION**

**Damage due to incorrect cleaning**

Therefore:

- Do not use any aggressive cleaning agents. Water used for cleaning including the chemical additives must be pH-neutral.
- Liquids must not touch the actuator during the retraction or extension.
- Only use the auxiliary materials listed by the manufacturer.
- Emergency lowering mechanism for quick adjustment system may not be treated with oil, grease or other lubricants.
- No steam jets or pressure washers may be used for cleaning.
- Other cleaning agents or cleaning devices may only be utilized with the manufacturer's approval.

**Clean line actuator:**

1 Separate the device from the energy supply.
2 Clean dirty parts with a damp cloth.

**Cleaning of emergency lowering device, quick adjustment device:**

1 Separate the device from the energy supply.
2 Clean emergency lowering mechanism or quick adjustment device with a damp cloth and prophyl alcohol.

## 8.2.2 Inspections and readings

- Execution by professional electrician.
- The inspections and readings must be performed as stipulated by the applicable standards and regulations. The list of the applicable standards can be found in the appendix.
- The inspections must be documented (→ *"Service Log"*).

**Measuring of the protective conductor resistance (MAX6)**

The external metal parts are not reliably connected with the protective conductor, with the exception of the external protective conductor connection. The separation/insulation takes place either through a double or reinforced insulation or through an intermediate circuit that is connected with a protective conductor within the housing. **A reading of the protective conductor resistance is therefore not possible.** Potential connections only take place by accident due to metal parts that touch each other more or less forcefully.

**Complete the following entries in the service log:**

- Name of the executing body (company, department)
- Names of the staff on duty
- Identification of the device/system (type, serial number, inventory number) and the respective accessories
- Completed inspections and readings
- Scope and results of the inspections
- Measuring method, measuring device, measuring results for readings
- Overall assessment
- Date and signature of the assessing person; personal coding is a viable alternative for IT applications.

Service log

## 8.2.3 Check sealing function of plug

To be performedby professional electrician

**Check sealing function of DIN-8 plug**

**1** Separate the device from the energy supply.
**2** Check sealing O-ring (**3**) of the DIN-8 plug (**2**) for damage.
**3** Ensure that there is no irregular gap between the DIN-8 plug (**2**) and the connection outlet (**1**) of the housing.
**4** If sealing O-rings (**3**) are damaged, have the manufacturer replace them.
**5** If there is no damage, reconnect the device with the energy supply.

Fig. 56

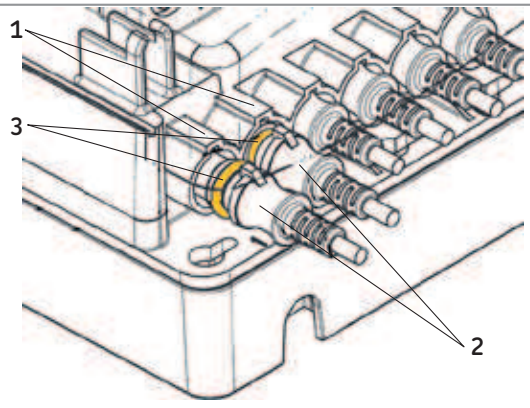

**Check sealing function of jack plug**

1 Separate the device from the energy supply.
2 Check sealing O-ring (**2**) of the jack plug (**3**) for damage.
3 Ensure that there is no irregular gap between the jack plug (**3**) and the connection outlet (**1**) of the housing.
4 If sealing O-rings (**2**) are damaged, have the manufacturer replace them.
5 If there is no damage, reconnect the device with the energy supply.

Fig. 57

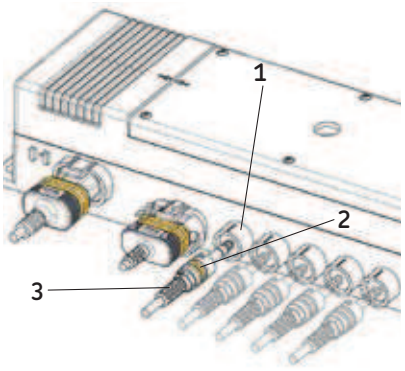


**Check sealing function of manual switch**

1 Separate the device from the energy supply.
2 Check sealing O-ring (**2**) of the manual switch (**3**) for damage.
3 Ensure that there is no irregular gap between the manual switch (**3**) and the connection outlet (**2**) of the housing.
4 If sealing O-rings (**1**) are damaged, have the manufacturer replace them.
5 5 If there is no damage, reconnect the device with the energy supply.

Fig. 58

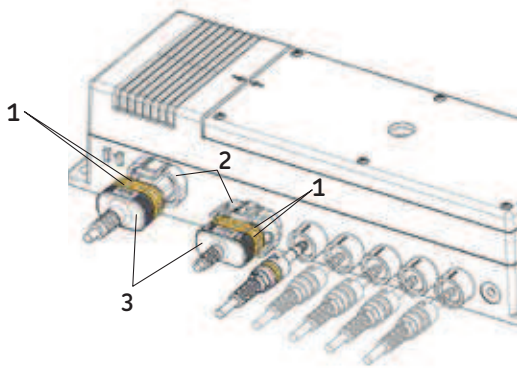

**⚠ CAUTION**

**Material damage due to damage or wrong sealing rings**
Damaged or wrong sealing rings cannot guarantee protection pursuant to IPX6S.
Therefore:

- Ask the manufacturer to replace the damaged sealing rings immediately.

## 8.2.4 Check of visual condition

To be performed by qualified personnel

1 Separate the device from the energy supply.
2 Check the following structural components for visual external damage:

Fig. 59

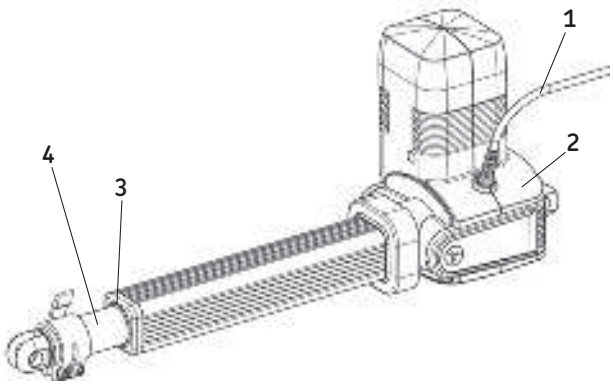


1 Check connecting cables for cracks, cuts and pinched sections
2 Check multi-shell plastic housing for cracks and gaps
3 Check dirt removal ring for cracks, gaps and broken pieces
4 Check casing tube for scratches and indentations
5 Notify processor or manufacturer in case of damage
6 If there is no damage and the processors/manufacturer has not communicated any concerns, reconnect the device to the power supply.

### 8.2.5 Check options

**Check functionality of emergency lowering device, quick adjustment**

- Ensure that there is no excessive application of force, extremely slick movement (independent downward movement of the actuator after opening the release handle) under nominal load (→ *Chapter "Operation"* → *"Operate Emergency Lowering Device"*, *"Operate Quick Adjustment"*).

**Check functionality for electrical pinch protection**

- Ensure that the gear pin (**1**) is lifted in the backload direction to turn off the actuator.

Fig. 60

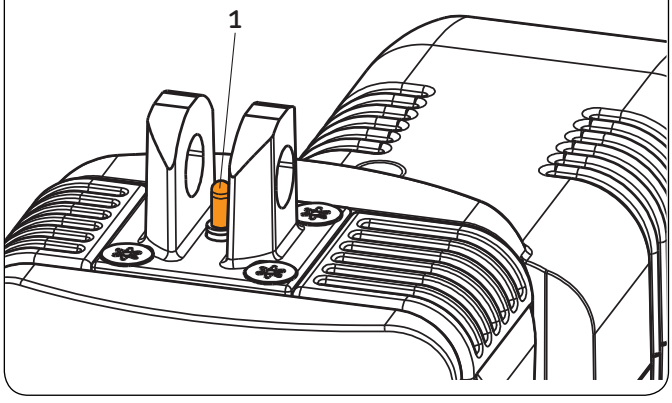


**Note!**
Inform the manufacturer in case of damage or malfunction.

## 8.3 Measures after completed maintenance

Upon completion of the maintenance work, the following steps have been executed prior to restarting the device.

1. Check all previously loosened screw connections for a tight fit.
2. Ensure that all used tools, materials and other equipment have been removed from the work area.
3. Clean work area and remove potential spills such as e. g. liquids, processing material or similar.
4. Ensure that all safety measures of the system work without a problem.
5. Check functions.
6. Document the inspections in the service log.

# 9 Malfunctions

The following chapter describes potential causes for disruptions and the work that is necessary to restore operation.

In the event of more frequent malfunctions, shorten the maintenance intervals according to the actual load.

Contact the manufacturer concerning malfunctions which are not solved by the subsequent notices; see service address on the back cover.

**Personnel**

- Unless indicated otherwise, the work described herein to solve malfunctions may be performed by the operator.
- Some work may only be carried out by qualified personnel, which is specifically indicated in the description of the individual malfunction.
- Work on the electric system may only be performed by professional electricians.

**⚠ DANGER**

**Electric shock and moving parts hazards**
Serious injury or death can be caused by touching live electrical components and by unexpected movement of the actuator.
**Be sure power supply is off and actuator is locked out before installing.**



**Electrical equipment**

**⚠ DANGER**

**Danger if restarted without authorization**
When correcting faults, there is danger of the energy supply being switched on without authorization. This poses a lifethreatening hazard for persons in the danger zone.

Therefore:

- Prior to starting work, switch off the system and safeguard it from being lockout.



**Safeguarding against restart**

**DANGER**

**Risk of injury and material damage due to incorrect repair of malfunction**

The Matrix linear actuator is not designed for repair work. Incorrect repair of a malfunction may lead to personal injury or material damage.

Therefore:

- Never loosen the screws on the linear actuator or try to open the linear actuator.
- In the event of a malfunction that cannot be fixed by adhering to the subsequent notices, dismantle the device and send it to the manufacturer for repair. (→ *Chapter "Transport, Packaging and Storage"*).



Incorrect repair of malfunction

**Behavior during malfunctions**

In principle:

1 In the event of a malfunction that may present an immediate danger to persons or assets, turn off the actuator or control unit immediately and safeguard against a restart.
2 Determine cause of malfunction.
3 Depending on the type of a malfunction, have it repaired by qualified personnel.
4 Inform responsible party on-site concerning malfunction.

**Note!**

The following malfunction table provides information as to who is authorized to perform the repair.

# 9.1 Malfunction table

## 9.1.1 Matrix MAX1 and MAX3

| Malfunction | Possible cause | Repair malfunction | To be repaired by |
|---|---|---|---|
| **Linear actuator doesn't move** | No supply voltage. | Check power supply. | Professional electrician |
| | Lack of plug contact or plug has not been inserted properly. | Plug contacts:<br>Device control unit, control of voltage network.<br>Check control operating element. | Operator |
| | Defective network cable or power plug. | Supply cable and plug of the lines:<br>Check device control unit, control of voltage network control operating element for damage, if necessary replace defective elements. | Professional electrician |
| | Obstacle in the stroke area of the linear actuator. | Remove all obstacles in the stroke area. | Operator |
| | Incorrect load. | Measure static and dynamic load and compare with information concerning the product label. If the load capacity is exceeded, check the nominal load and install stronger actuator if necessary. | Qualified personnel |
| | Defective control unit/operating element. | Identification of defect concerning the SKF control unit; if necessary replace defective control, operating element. | Qualified personnel |
| | Lifespan of the device is exceeded. | If the actuator is older than 10 years and has performed more than 10 000 double strokes with a 200 mm hub, the actuator needs to be replaced. | Qualified personnel |
| | Linear actuator cannot be set in motion by any of the above listed measures. | Exchange device. | Qualified personnel |
| **Linear actuator cannot be lifted** | Obstacle in the stroke area of the linear actuator. | Remove all obstacles in the stroke area. | Operator |
| | Incorrect load. | Remove all loads that are on the elements. | Operator |
| | Defective screw nut. | Exchange device. | Qualified personnel |
| **Significantly reduced speed** | Obstacle in the stroke area of the linear actuator. | Remove all obstacles in the stroke area. | Operator |
| | Incorrect load. | Remove all loads that are on the elements. | Operator |
| | Defective motor, gear or screw nut | Exchange device. | Qualified personnel |
| **Significantly increase of noises during operation** | Obstacle in the stroke area of the linear actuator. | Remove all obstacles in the stroke area. | Operator |
| | Incorrect load. | Remove all loads that are on the elements. | Operator |
| | Defective motor, gear or ball screw nut. | Exchange device. | Qualified personnel |

## 9.1.2 Matrix MAX6

| Malfunction | Possible cause | Repair malfunction | To be repaired by |
|---|---|---|---|
| **Linear actuator doesn't move** | No supply voltage. | Check power supply. | Professional electrician |
| | Lack of plug contact or plug has not been inserted properly. | Plug contacts:<br>Device-electric grid, check deviceoperating element. | Operator |
| | Defective network cable or power plug. | Supply cable and plug of the lines:<br>Device-electric grid, check for damage on device-operating element, if necessary replace defective elements. | Professional electrician |
| | Obstacle in the stroke area of the linear actuator. | Remove all obstacles in the stroke area. | Operator |
| | Incorrect load. | Measure static and dynamic load and compare with information on the type label. If the load capacity is exceeded, replace the device. | Qualified personnel |
| | Lifespan of the device is exceeded. | If the actuator is older than 10 years and has performed more than 10 000 double strokes with a 200 mm hub, the actuator needs to be replaced. | Qualified personnel |
| | Linear actuator cannot be set in motion by any of the above listed measures. | Exchange device. | Qualified personnel |
| **Linear actuator cannot be operated** | Incorrect operating element. | Compare the information on the type label of the operating element with the information on the type sign of the device. If the manufacturer of the operating element is not authorized for the Matrix actuator, replace incorrect operating element through SKF operating element authorized by the manufacturer. | Qualified personnel |
| | Defective SKF operating element. | Conduct malfunction identification of the SKF operating element, if necessary replace operating element. | Qualified personnel |
| | Defective screw nut. | Exchange device. | Qualified personnel |
| **Linear actuator cannot be lifted** | Obstacle in the stroke area of the linear actuator. | Remove all obstacles in the stroke area. | Operator |
| | Incorrect load. | Remove all loads that are on the elements. | Operator |
| | Defective ball screw nut. | Exchange device. | Qualified personnel |
| **Significantly reduced speed** | Obstacle in the stroke area of the linear actuator. | Remove all obstacles in the stroke area. | Operator |
| | Incorrect load. | Remove all loads that are on the elements. | Operator |
| | Defective motor, gear or ball screw nut. | Exchange device. | Qualified personnel |
| **Significantly increase noises during operation** | Obstacle in the stroke area of the linear actuator. | Remove all obstacles in the stroke area. | Operator |
| | Incorrect load. | Remove all loads that are on the elements. | Operator |
| | Defective motor, gear or ball screw nut. | Exchange device. | Qualified personnel |

## 9.2 Start of operation after fixing malfunction

After the malfunction has been fixed, perform the steps from the Installations chapter prior to restart.

# 10 Dismantling

**Personnel**

- The dismantling may only be carried out by specifically qualified personnel.
- Work on the electric system may only be performed by professional electricians.

**⚠ DANGER**

**Electric shock and moving parts hazards**
Serious injury or death can be caused by touching live electrical components and by unexpected movement of the actuator.
**Be sure power supply is off and actuator is locked out before installing.**



Electrical equipment

**⚠ WARNING**

**Risk of injury due to incorrect dismantling**
Stored residual power, sharp-edged components, pins and corners on the individual components or at the required tools can cause serious injuries.
Therefore:

- Ensure there is ample of space for the dismantling prior to starting with the work.
- Use caution when working with open, sharp-edged structural components.
- Ensure order and cleanliness at the dismantling site! Loosely stacked structural components or structural components and tools on the floor may present a source for accidents.
- Dismantle structural components professionally pursuant to applicable local regulations.
- Secure structural components in a way so they would not be able to fall or tip over.
- Contact the manufacturer if you have any questions or concerns.



Basic Information

# 10.1 Dismantling

- Special tools required:
- Special tool from the manufacturer (part no. 0125322)

## 10.1.1 Dismantling of MAX1 and MAX3

**1** Separate device from energy supply (→ *Chapter "Operation" →"Shut down MAX1 and MAX3"*).
**2** Secure elements of the application in such a fashion, that no loads can impact the fork and the hinge head.
**3** Loosen and remove fastening bolts from the mounting strap of the fork and the hinge head.
**4** Separate linear actuator from application elements.
**5** Clean device.
**6** Carefully package for shipment to the manufacturer. For disposal, disassemble device according to applicable local occupational health and environmental regulations.

## 10.1.2 Dismantling of MAX6

**1** Separate device from energy supply (→ *Chapter "Operation" →"Shut down MAX6"*).

**Separate device from operating element:**

**2** Place special tool (**1**) onto the plug of the operating element, so that the form-fitted edges (**2**) snap into the grooves (**3**).

Fig. 61

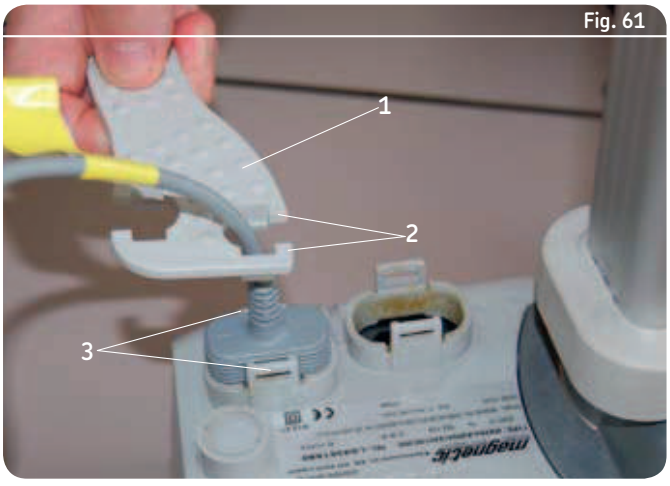

3 Push down special tool until the locking mechanism on the plug is opened.

Fig. 62

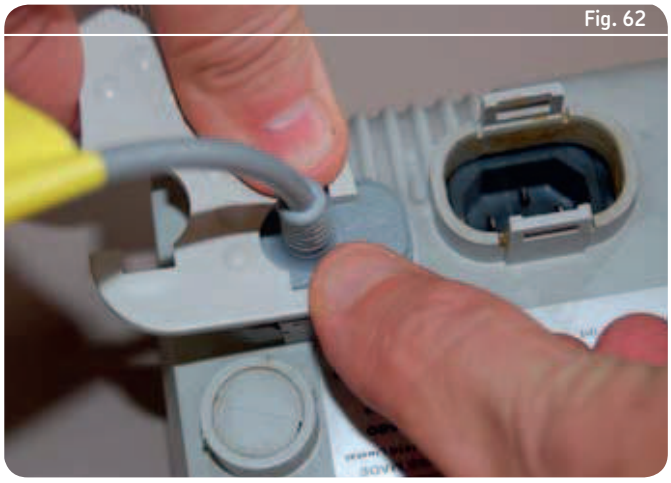

4 Pull out plug (**1**).

Fig. 63

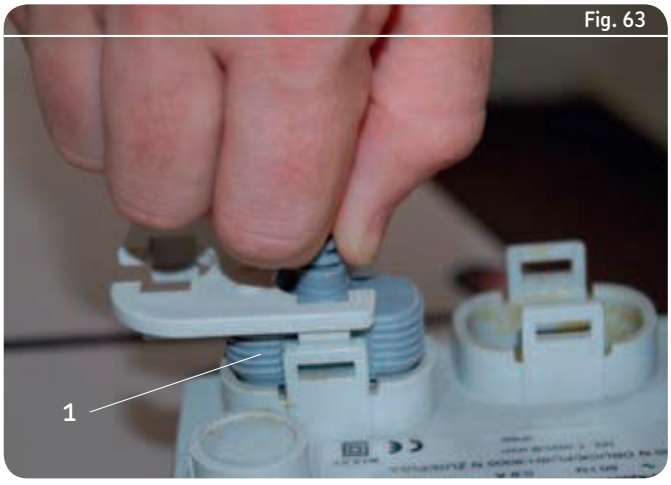


**Separate electric cord from the actuator:**

5 Carry out steps 2 to 4 for the plug of the power line (**1**).

Fig. 64

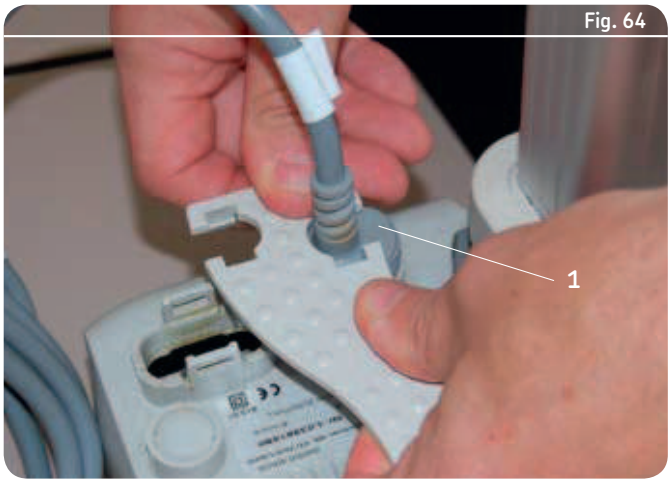

**Sever connection to the slave actuator, if it exists:**

**6** Place special tool (**1**) onto the nut (**2**) of the jack plug.
**7** Turn special tool (**1**) counter-clockwise until the bayonet joint of the jack plug is unlocked.

Fig. 65

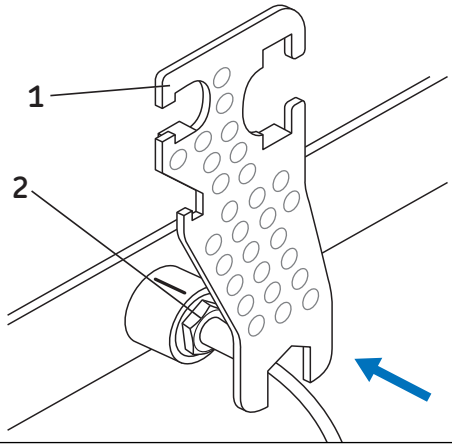


**8** Pull jack plug (**1**) out of the connection outlet (**2**) of the actuator.

Fig. 66

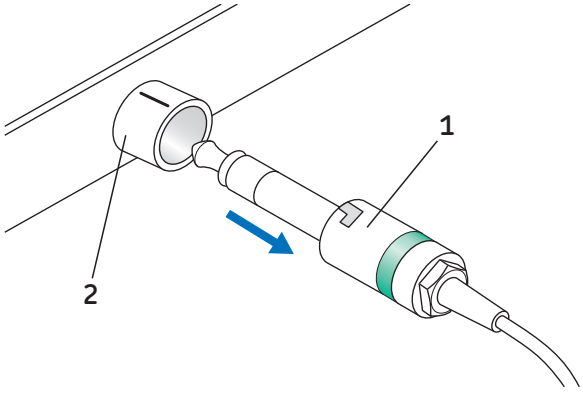


**9** Secure elements of the application in such a fashion, that no loads can impact the fork and the hinge head.
**10** Loosen and remove fastening bolts from the mounting strap of the fork and the hinge head.
**11** Separate linear actuator from application elements.
**12** Clean actuator.
**13** Careful packaging for shipment to the manufacturer. For disposal, disassemble device according to applicable local occupational health and environmental regulations.

## 10.2 Disposal

To the extent that no take-back or disposal agreement has been put in place, disassembled components should be recycled.

- Dispose of metals and plastic components at an appropriate recycling centre.
- Sort remaining components based on the respective material and dispose of according to applicable local occupational health and environmental regulations.

**⚠ CAUTION**

**Da e can be caused to the environment due to incorrect disposal**

Electronic waste, electronic components, lubricants and other additives are subject to special waste treatment regulations and may only be disposed of by approved specialized companies!

The local municipal authorities or specialized waste management companies can provide information concerning environmentally appropriate disposal.

## Notes

Please contact:
**SKF Actuation System (Liestal) AG**
Oristalstrasse 97
4410 Liestal
Switzerland

Tel.: +41 61 925 4111
Fax: +41 61 921 3704

actuators@skf.com

® SKF and MATRIX are registered trademarks of the SKF Group.

© SKF Group 2017
The contents of this publication are the copyright of the publisher and may not be reproduced (even extracts) unless prior written permission is granted. Every care has been taken to ensure the accuracy of the information contained in this publication but no liability can be accepted for any loss or damage whether direct, indirect or consequential arising out of the use of the information contained herein.

**PUB MT/I1 11133/2 EN** · May 2017