PRODUCT DETAILS

ARTICLE: 18417

SWEEL P 200X50/60 HD BB SWIVEL FORK E70



Wheel series P

Monolitic polyammide 6 wheels available with standard shielded or stainless steel precision ball bearings; standard or stainless steel roller bearing; plain bore.
Wheel fitted with ball bearings.

Castor series E70

Extra heavy duty fork assemblies fabricated from heavy gauge sheet steel; swivelling with a thrust and taper roller bearings. Finish: blue paint.

Technical data

Wheel diameter	D	200 mm
Tyre width	E	50,0 mm
Bearing seat diameter	s	52 mm
Bore diameter	d	25 mm
Outer faces bearings distance	V	56 mm
Weight article		5,100 kg
Hub width	L	60 mm
Overall height	H	251 mm
Top plate outer dimensions	AxB	135x110 mm
Bolt hole spacing	axb	105x75 mm
Bolt hole spacing	axb	105x80 mm
Fixing bolt diameter	g	M12
Offset	F	70 mm
Fork width	U	60 mm
Load Capacity		1000 kg

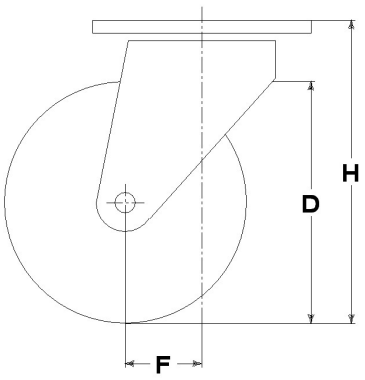

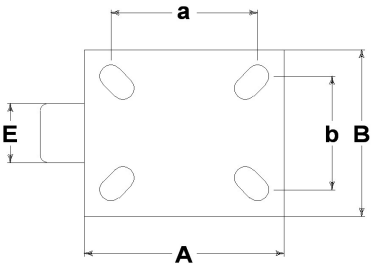

Related Articles

Spare part wheel: 18018CC
Version with footguard: 18417PP
Version with leading brake: 18417FV
Version with leading brake and footguard: 18417FVPP

GENERAL INFORMATION / RECOMMENDATIONS AND WARNINGS
The cited text and the complete catalogue in their most up-dated versions are available in the OEM's website page www.lagspa.it/downloads. The dimensions, descriptions, specifications and illustrations herein are indicative and subject to variations without notice. The fact that products are illustrated herein does not necessarily imply they are available from stock nor does it place us under any obligation to supply them.
Tests carried out refer to the original products with original accessories: the replacement of one of the components with others of different manufacture might prevent the same results from being achieved and will automatically invalidate any guarantee. Please contact our technical service concerning any special application.