# Series AP



AVENTICS™ Series AP Directional valves

EMERSON™

## Series AP

The AVENTICS Series AP offers a wide range of poppet valves with aluminium housing. With many actuation control versions available (roller, lever, pedal, push-button or plunger) the AP Series is the universal solution for automation systems and panel installation.

- Light and robust valves
- Various mechanical actuating controls
- panel installation



# Product overview

Page

**Lever**

2/2-directional valve, Series AP ..... 6
Lever - 2/2 NC, with spring return

3/2-directional valve, Series AP ..... 8
Lever - 3/2, double solenoid

3/2-directional valve, Series AP ..... 10
Lever - 3/2, with spring return

3/2-directional valve, Series AP ..... 12
Lever - 3/2, double solenoid

4/2-directional valve, Series AP ..... 13
Lever - 4/2, double air pilot

**Pedal**

3/2-directional valve, Series AP ..... 15
3/2, with spring return

3/2-directional valve, Series AP ..... 17
3/2, with spring return

4/2-directional valve, Series AP ..... 19
Pedal - 4/2, with spring return

4/2-directional valve, Series AP ..... 21
4/2, with spring return

**Plunger**

2/2-directional valve, Series AP ..... 23
Plunger - 2/2, with spring return

3/2-directional valve, Series AP ..... 25
Plunger - 3/2, with spring return

3/2-directional valve, Series AP ..... 27
Plunger - 3/2, double solenoid

3/2-directional valve, Series AP ..... 29
Plunger - 3/2, with spring return

4/2-directional valve, Series AP ..... 31
4/2, with spring return

**Push button**

2/2-directional valve, Series AP ..... 33
Push button - 2/2, with spring return

3/2-directional valve, Series AP ..... 35
Push button - 3/2, with spring return

3/2-directional valve, Series AP ..... 37
Push button - 3/2, double solenoid

3/2-directional valve, Series AP ..... 39
3/2, with spring return

4/2-directional valve, Series AP ..... 41
Push button - 4/2, with spring return

**Roller**

2/2-directional valve, Series AP ..... 43
Roller - 2/2, with spring return

2/2-directional valve, Series AP ..... 45
Roller lever, one-way trip - 2/2, with spring return

# Product overview

Page

3/2-directional valve, Series AP ..... 47
Roller - 3/2, with spring return
3/2-directional valve, Series AP ..... 49
Roller lever, one-way trip - 3/2, with spring return
3/2-directional valve, Series AP ..... 51
Roller - 3/2, double solenoid
3/2-directional valve, Series AP ..... 53
Roller lever, one-way trip - 3/2, double solenoid
3/2-directional valve, Series AP ..... 55
Roller - 3/2, with spring return
3/2-directional valve, Series AP ..... 57
Roller lever, one-way trip - 3/2, with spring return
4/2-directional valve, Series AP ..... 59
Roller - 4/2, with spring return

**For panel installation**

3/2-directional valve, Series AP ..... 61
panel installation - 3/2, double solenoid
3/2-directional valve, Series AP ..... 63
panel installation - 3/2, with spring return
Series AP - inch ..... 65

**Accessories overview Rotary switch**

Actuating controls for AP/ST series control panel valves ..... 67
Rotary switch with two notched positions - Red
Actuating controls for AP/ST series control panel valves ..... 68
Rotary switch with two notched positions - Grey

**Accessories overview Rotary lock**

Actuating controls for AP/ST series control panel valves ..... 69
Rotary lock with two keys - Grey - Rotary lock with two keys - Grey

**Accessories overview Push button**

Actuating controls for AP/ST series control panel valves ..... 70
Push button - Red
Actuating controls for AP/ST series control panel valves ..... 71
Push button - Black
Actuating controls for AP/ST series control panel valves ..... 72
Push button - Yellow
Actuating controls for AP/ST series control panel valves ..... 73
Push button - Green
Actuating controls for AP/ST series control panel valves ..... 74
Push button with detent and rotary release - Black

**Accessories overview Lever switch**

Actuating controls for AP/ST series control panel valves ..... 75
Lever switch - Red
Actuating controls for AP/ST series control panel valves ..... 76
Lever switch - White

**Accessories overview Mushroom button**

Actuating controls for AP/ST series control panel valves ..... 77
Mushroom button - Red

# Product overview

Page

Actuating controls for AP/ST series control panel valves..... 78
Mushroom button - Green
Actuating controls for AP/ST series control panel valves..... 79
Mushroom button - Yellow
Actuating controls for AP/ST series control panel valves..... 80
Emergency OFF button, red, with detent and rotary release - Red

**Accessories overview Mechanical accessories**

Accessories for actuating controls for AP/ST series control panel valves..... 81
Label base - Anthracite
Accessories for actuating controls for AP/ST series control panel valves..... 82
Name plates, angular - silver
Accessories for actuating controls for AP/ST series control panel valves..... 83
Emergency OFF sign, round - Yellow
Accessories for actuating controls for AP/ST series control panel valves..... 84
Blanking plug - Anthracite
Accessories for actuating controls for AP/ST series control panel valves..... 85
Mounting nut M22x1 - Black
Accessories for actuating controls for AP/ST series control panel valves..... 86
Spare key
Accessories for actuating controls for AP/ST series control panel valves..... 87
Reduction , Ø30.5 to Ø22.5
Accessories for actuating controls for AP/ST series control panel valves..... 88
Adapter kit to connect actuating controls to AP/ST series valves
Protective cover, Series AP..... 89
Protective cover, Series AP..... 91

**Accessories overview Silencer**

Silencers, series SI1, Sintered bronze..... 93

## 2/2-directional valve, Series AP

Flow: 350 l/min
Activation: Mechanical
Qn 1 > 2: 350 l/min
Compressed air connection type: Internal thread
Compressed air connection input: G 1/8
Compressed air connection output: G 1/8
Ambient temperature min./max.: -30 °C ... 80 °C
Medium temperature min./max.: -30 °C ... 80 °C
Working pressure min./max.: 0 bar ... 10 bar



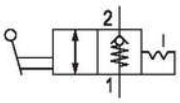


| Actuating element | Switching principle | Compressed air connection input | Compressed air connection output | Part No. |
|---|---|---|---|---|
| Lever | 2/2 NC, with spring return | G 1/8 | G 1/8 | 0820404024 |

Dimensions in mm

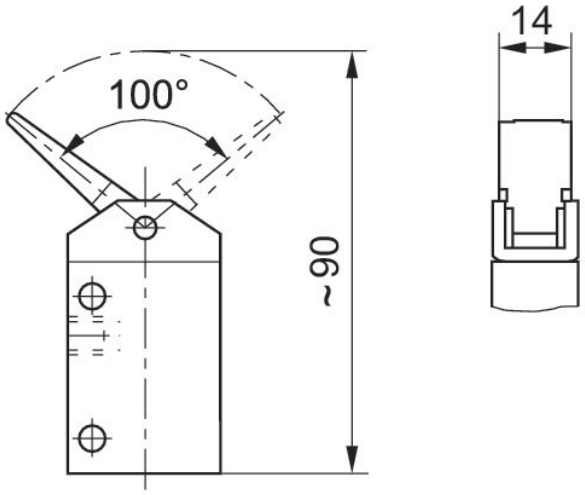


actuating torque: 6 Ncm

**Actuating force+**

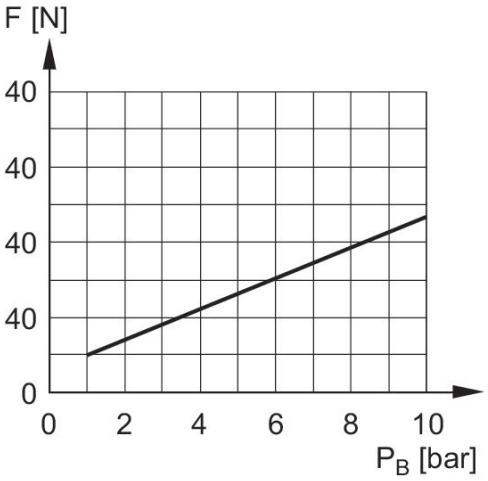


F = actuating force
$P_B$ = Working pressure

## 3/2-directional valve, Series AP

Flow: 190 l/min
Activation: Mechanical
Qn 1 > 2: 190 l/min
Compressed air connection type: Internal thread
Compressed air connection input: M5
Compressed air connection output: M5
Ambient temperature min./max.: -30 °C ... 80 °C
Medium temperature min./max.: -30 °C ... 80 °C
Working pressure min./max.: 0 bar ... 10 bar



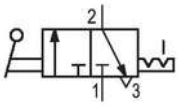


| Actuating element | Switching principle | Compressed air connection input | Compressed air connection output | Part No. |
|---|---|---|---|---|
| Lever | 3/2, double air pilot | M5 | M5 | 0820408005 |

Dimensions in mm

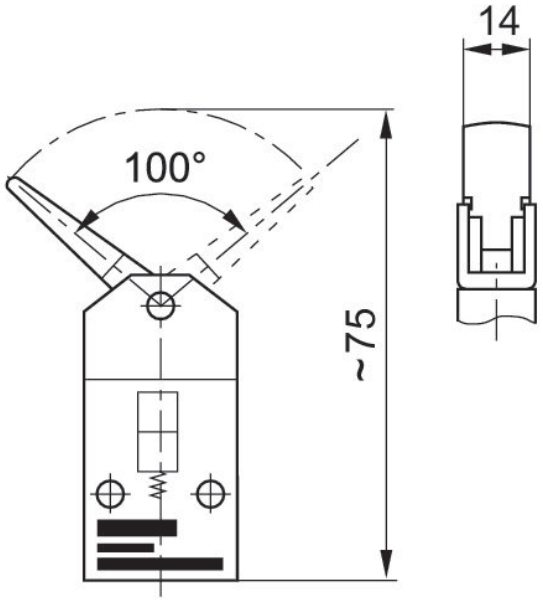


actuating torque: 5 Ncm

**Actuating force+**

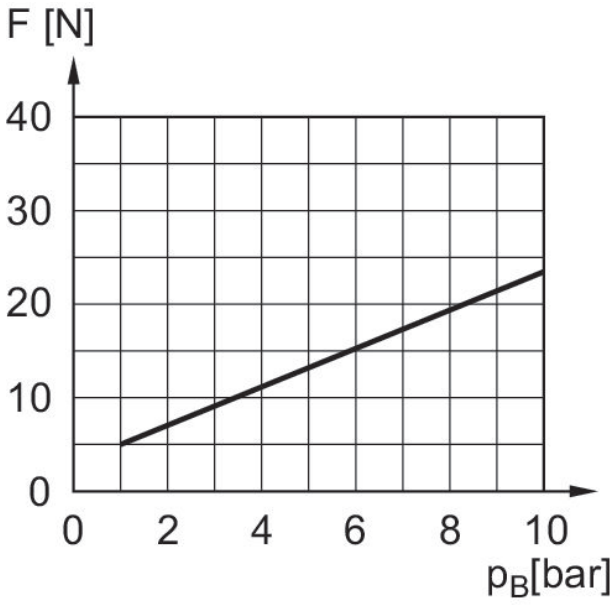


F = actuating force
$P_B$ = Working pressure

## 3/2-directional valve, Series AP

Activation: Mechanical
Qn 1 > 2: 250 l/min
Compressed air connection type: Internal thread
Compressed air connection input: G 1/8
Compressed air connection output: G 1/8
Compressed air connection, exhaust: G 1/8
Ambient temperature min./max.: -30 °C ... 80 °C
Medium temperature min./max.: -30 °C ... 80 °C
Working pressure min./max.: 0 bar ... 10 bar



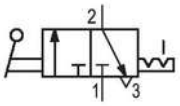


| Actuating element | Switching principle | Compressed air connection input | Compressed air connection output | Compressed air connection, exhaust | Part No. |
|---|---|---|---|---|---|
| Lever | 3/2, with spring return | G 1/8 | G 1/8 | G 1/8 | 0820402105 |

Dimensions in mm

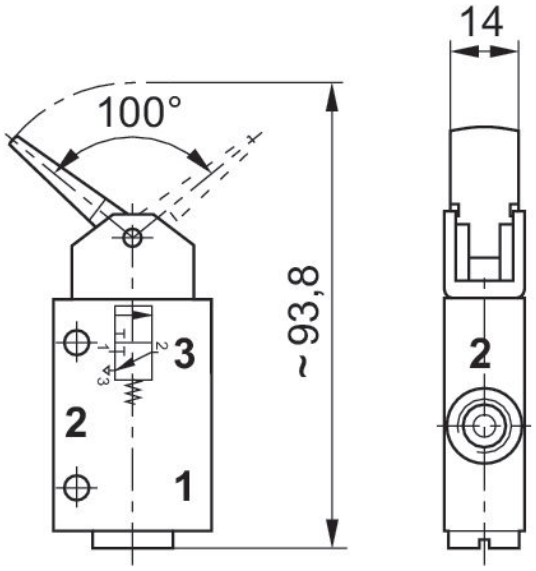

**Actuating force+**

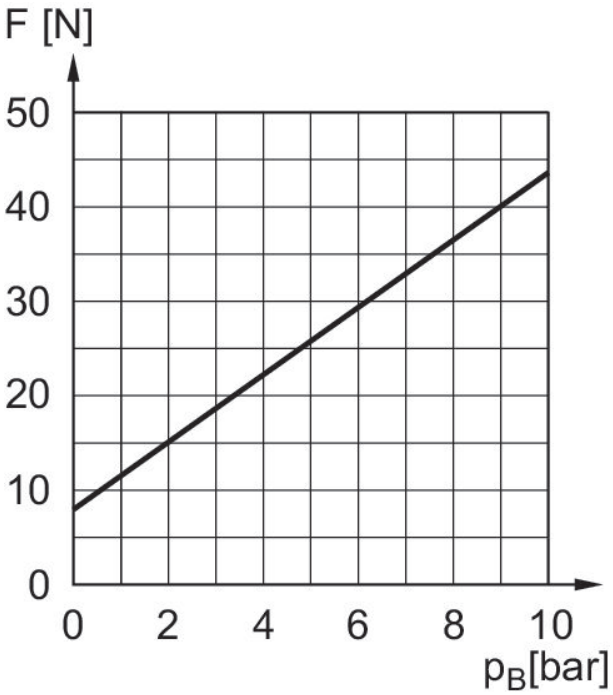


F = actuating force
$P_B$ = Working pressure

## 3/2-directional valve, Series AP

Flow: 550 l/min
Activation: Mechanical
Compressed air connection type: Internal thread
Compressed air connection input: G 1/4
Compressed air connection output: G 1/4
Compressed air connection, exhaust: G 1/4
Ambient temperature min./max.: -30 °C ... 80 °C
Medium temperature min./max.: -30 °C ... 80 °C
Working pressure min./max.: 0 bar ... 10 bar



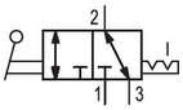


| Actuating element | Switching principle | Compressed air connection input | Compressed air connection output | Compressed air connection, exhaust | Part No. |
|---|---|---|---|---|---|
| Lever | 3/2, double air pilot | G 1/4 | G 1/4 | G 1/4 | 0820400005 |

Dimensions in mm

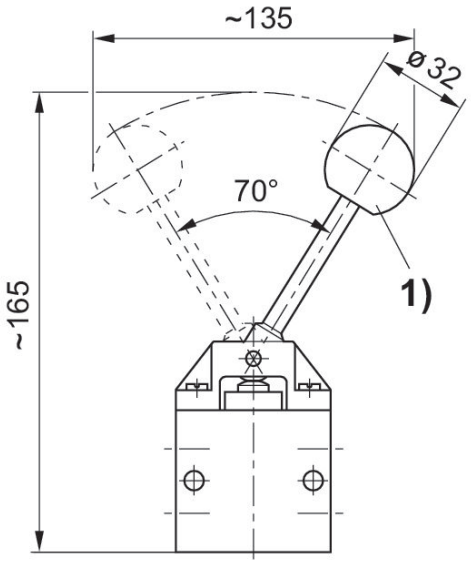


actuating torque: 40 Ncm
1) Ball

## 4/2-directional valve, Series AP

Flow: 550 l/min
Activation: Mechanical
Compressed air connection type: Internal thread
Compressed air connection input: G 1/4
Compressed air connection output: G 1/4
Compressed air connection, exhaust: G 1/4
Ambient temperature min./max.: -30 °C ... 80 °C
Medium temperature min./max.: -30 °C ... 80 °C
Working pressure min./max.: 0 bar ... 10 bar



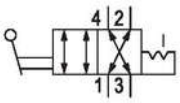


| Actuating element | Switching principle | Compressed air connection input | Compressed air connection output | Compressed air connection, exhaust | Part No. |
|---|---|---|---|---|---|
| Lever | 4/2, double air pilot | G 1/4 | G 1/4 | G 1/4 | 0820401005 |

Dimensions in mm

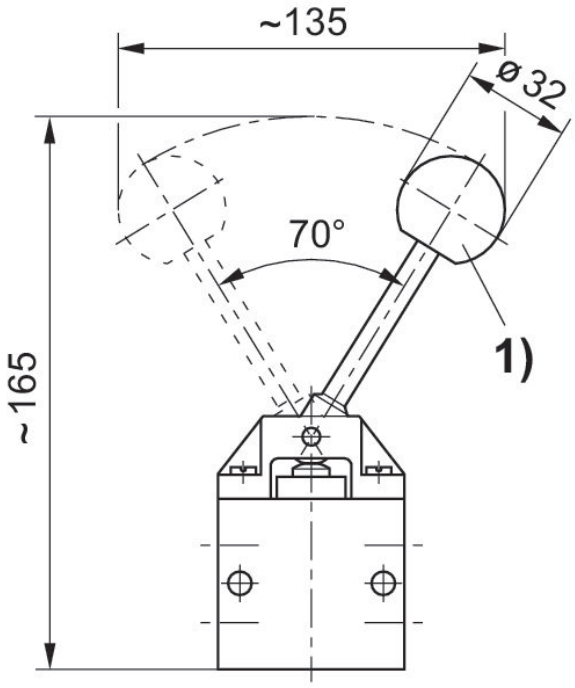


actuating torque: 40 Ncm
1) Ball

**Actuating force+**

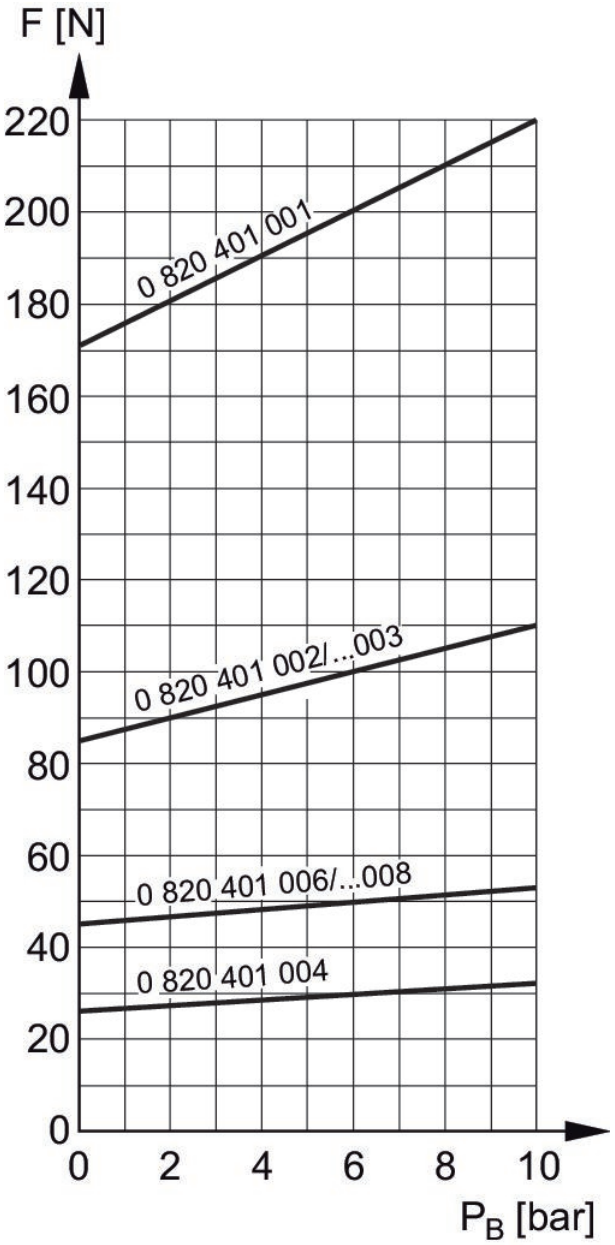


F = actuating force
$P_B$ = Working pressure

## 3/2-directional valve, Series AP

Flow: 550 l/min
Activation: Mechanical
Compressed air connection type: Internal thread
Compressed air connection input: G 1/4
Compressed air connection output: G 1/4
Compressed air connection, exhaust: G 1/4
Ambient temperature min./max.: -30 °C ... 80 °C
Medium temperature min./max.: -30 °C ... 80 °C
Working pressure min./max.: 0 bar ... 10 bar



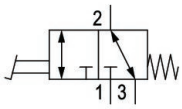


| Actuating element | Switching principle | Compressed air connection input | Compressed air connection output | Compressed air connection, exhaust | Part No. |
|---|---|---|---|---|---|
| Pedal | 3/2, with spring return | G 1/4 | G 1/4 | G 1/4 | 0820400006 |

Dimensions in mm

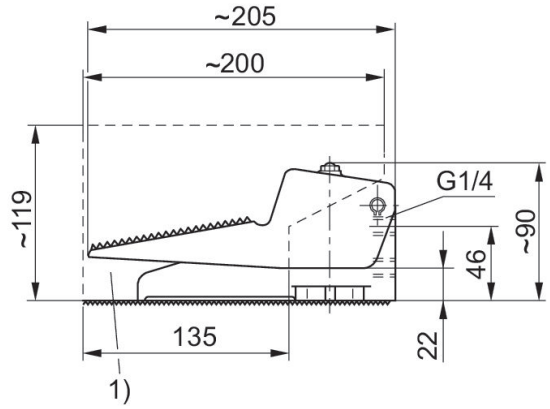


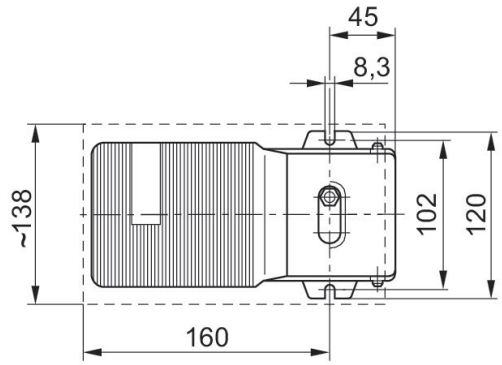


1) optional protective cover, part number 1828104001

**Actuating force+**

**Compressed air at port 3**

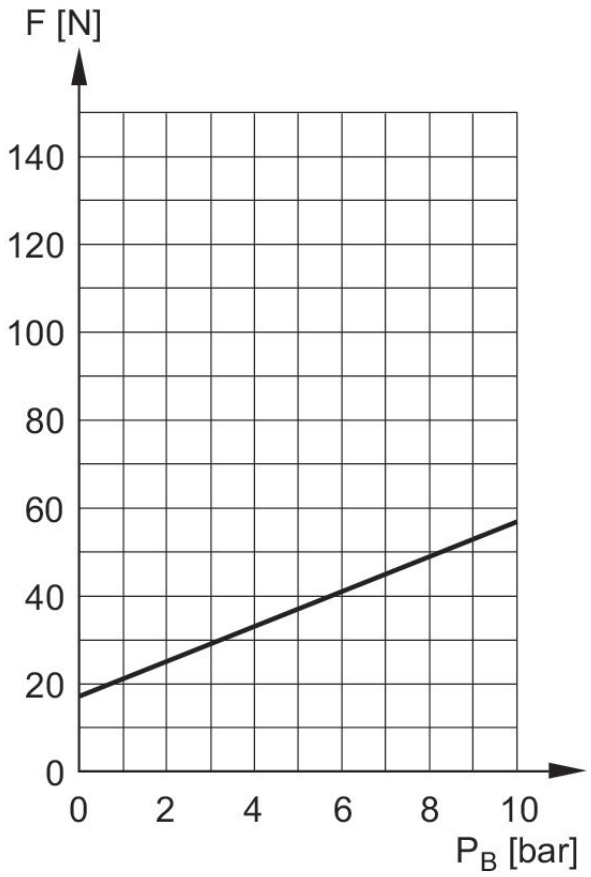


F = actuating force
$P_B$ = Working pressure

**Actuating force+**

**Compressed air at port 1**

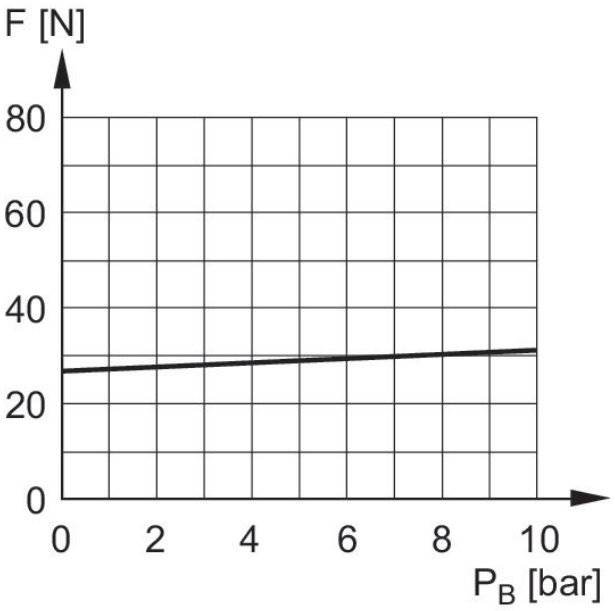


F = actuating force
$P_B$ = Working pressure

## 3/2-directional valve, Series AP

Flow: 550 l/min
Activation: Mechanical
Compressed air connection type: Internal thread
Compressed air connection input: G 1/4
Compressed air connection output: G 1/4
Compressed air connection, exhaust: G 1/4
Ambient temperature min./max.: -30 °C ... 80 °C
Medium temperature min./max.: -30 °C ... 80 °C
Working pressure min./max.: 0 bar ... 10 bar



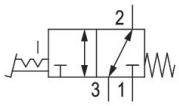


| Actuating element | Switching principle | Compressed air connection input | Compressed air connection output | Compressed air connection, exhaust | Part No. |
|---|---|---|---|---|---|
| Pedal, with detent | 3/2, with spring return | G 1/4 | G 1/4 | G 1/4 | 0820400008 |

Dimensions in mm

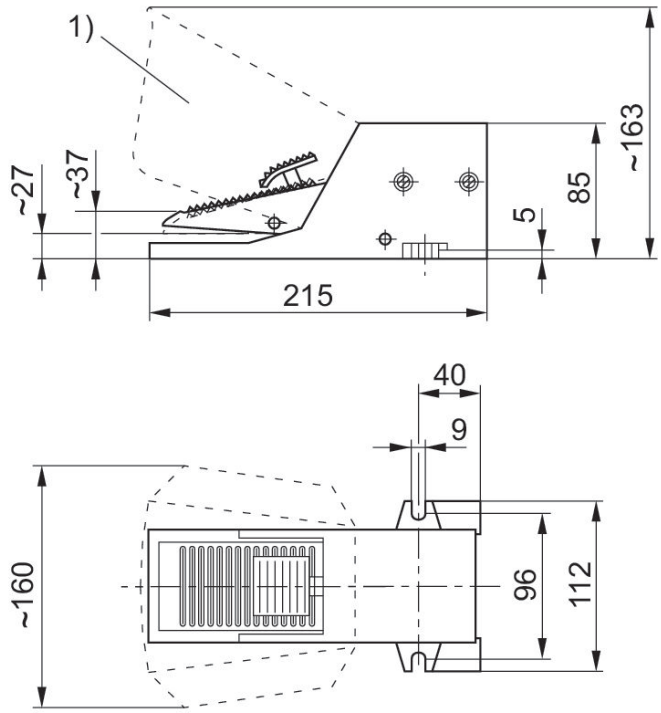


1) optional protective cover, part number 1828104002

**Actuating force+**

**Compressed air at port 3**

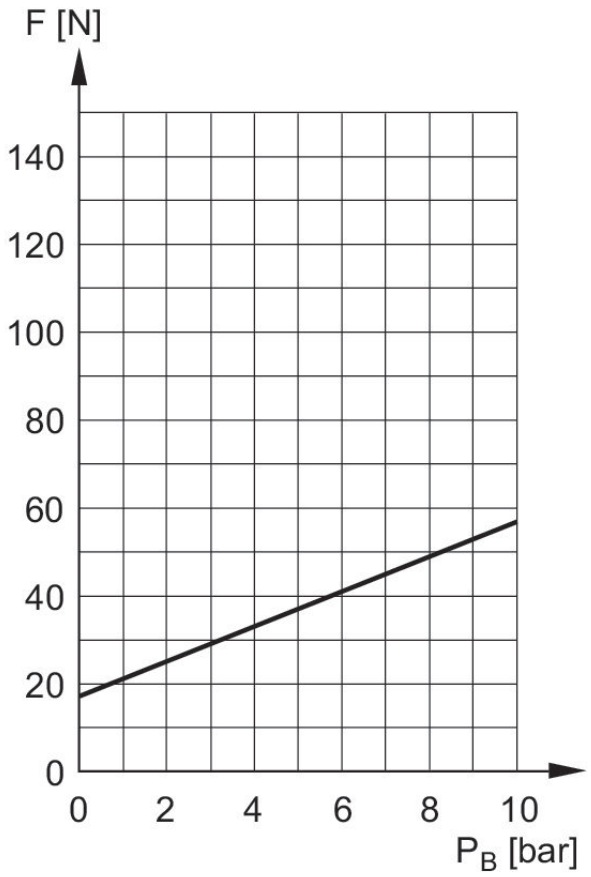


F = actuating force
$P_B$ = Working pressure

**Actuating force+**

**Compressed air at port 1**

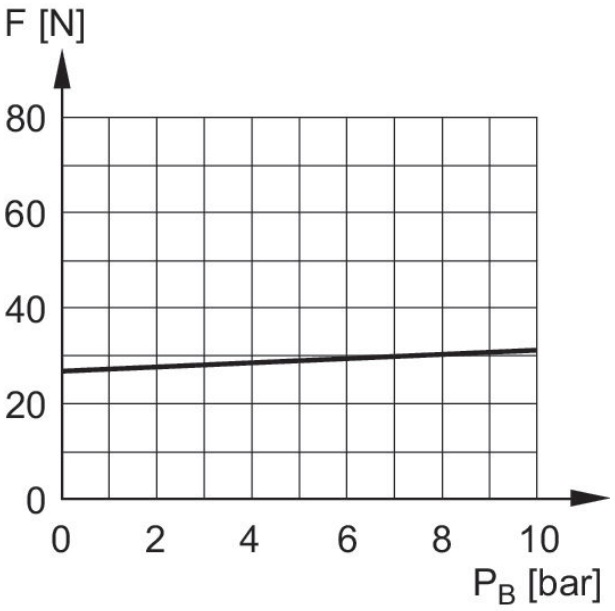


F = actuating force
$P_B$ = Working pressure

## 4/2-directional valve, Series AP

Flow: 550 l/min
Activation: Mechanical
Compressed air connection type: Internal thread
Compressed air connection input: G 1/4
Compressed air connection output: G 1/4
Compressed air connection, exhaust: G 1/4
Ambient temperature min./max.: -30 °C ... 80 °C
Medium temperature min./max.: -30 °C ... 80 °C
Working pressure min./max.: 0 bar ... 10 bar



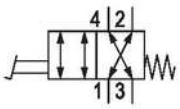


| Actuating element | Switching principle | Compressed air connection input | Compressed air connection output | Compressed air connection, exhaust | Part No. |
|---|---|---|---|---|---|
| Pedal | 4/2, with spring return | G 1/4 | G 1/4 | G 1/4 | 0820401006 |

Dimensions in mm

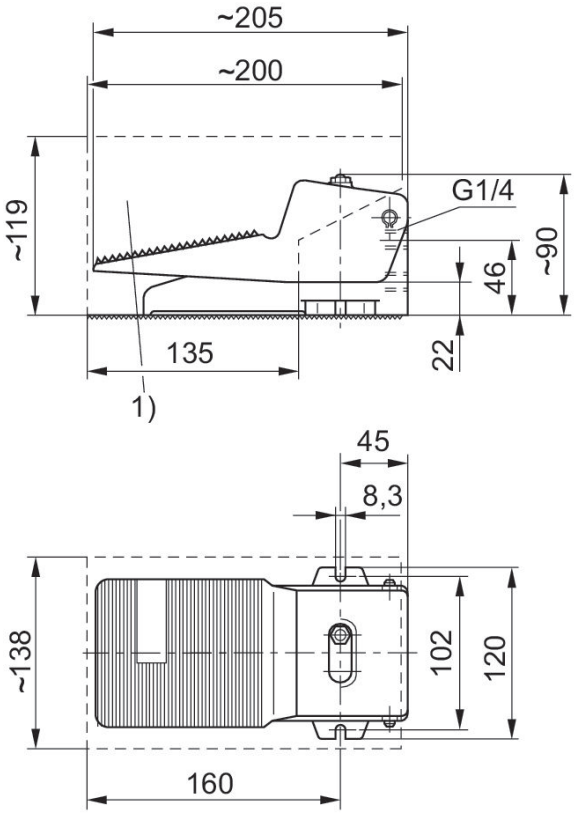


1) optional protective cover, part number 1828104001

**Actuating force+**

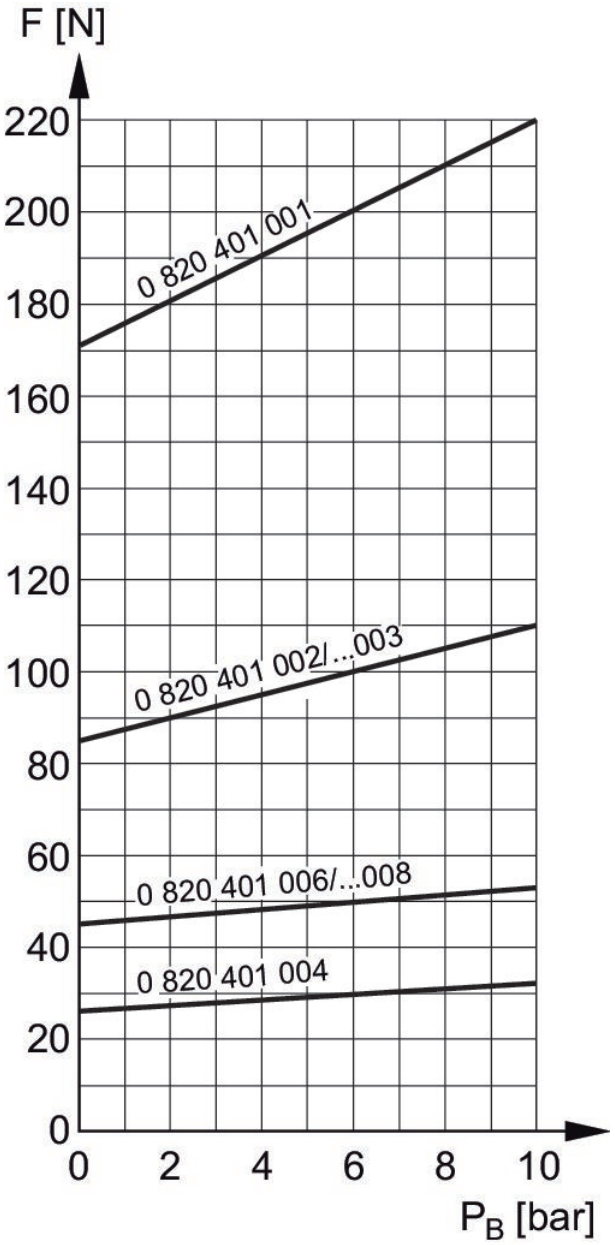


F = actuating force
$P_B$ = Working pressure

## 4/2-directional valve, Series AP

Flow: 550 l/min
Activation: Mechanical
Compressed air connection type: Internal thread
Compressed air connection input: G 1/4
Compressed air connection output: G 1/4
Compressed air connection, exhaust: G 1/4
Ambient temperature min./max.: -30 °C ... 80 °C
Medium temperature min./max.: -30 °C ... 80 °C
Working pressure min./max.: 0 bar ... 10 bar



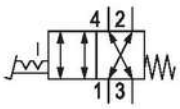


| Actuating element | Switching principle | Compressed air connection input | Compressed air connection output | Compressed air connection, exhaust | Part No. |
|---|---|---|---|---|---|
| Pedal, with detent | 4/2, with spring return | G 1/4 | G 1/4 | G 1/4 | 0820401008 |

Dimensions in mm

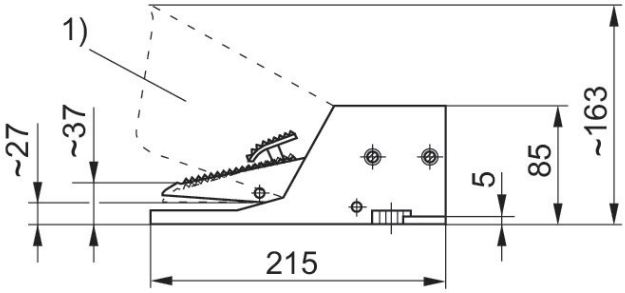


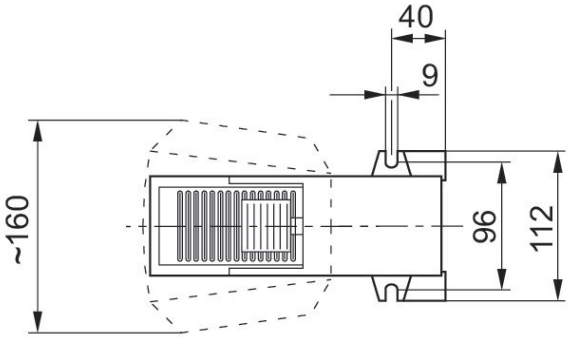


1) optional protective cover, part number 1828104002

**Actuating force+**

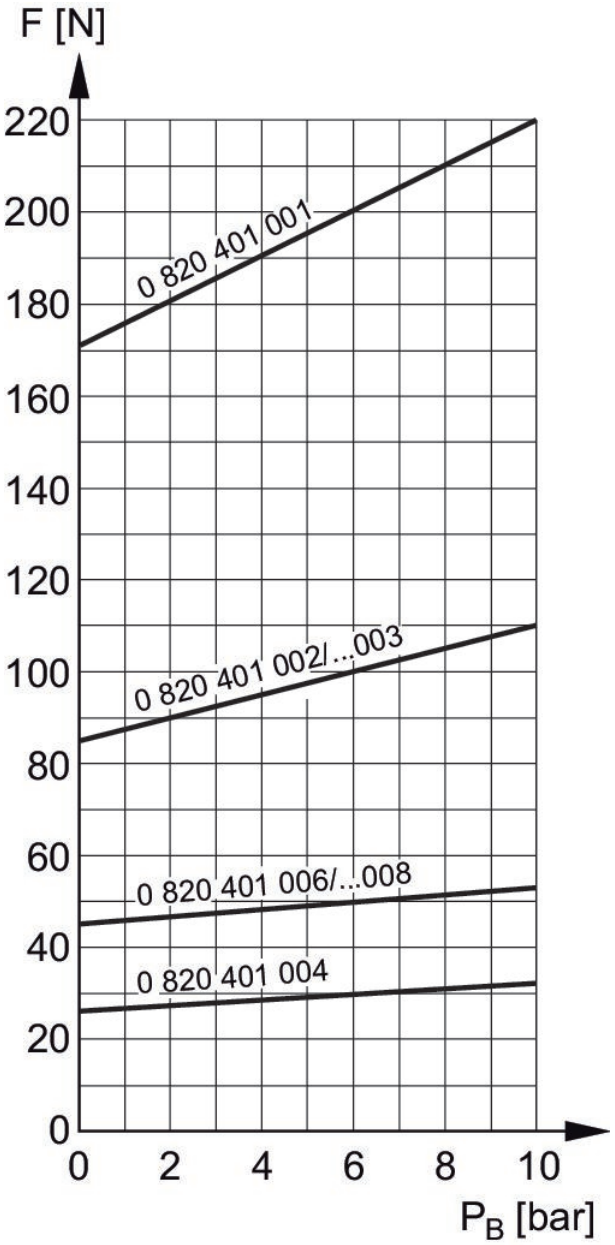


F = actuating force
$P_B$ = Working pressure

## 2/2-directional valve, Series AP

Flow: 350 l/min
Activation: Mechanical
Compressed air connection type: Internal thread
Compressed air connection input: G 1/8
Compressed air connection output: G 1/8
Ambient temperature min./max.: -30 °C ... 80 °C
Medium temperature min./max.: -30 °C ... 80 °C
Working pressure min./max.: 0 bar ... 10 bar



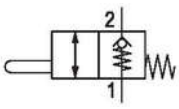


| Actuating element | Switching principle | Compressed air connection input | Compressed air connection output | Part No. |
|---|---|---|---|---|
| Plunger | 2/2, with spring return | G 1/8 | G 1/8 | 0820404020 |

Dimensions in mm

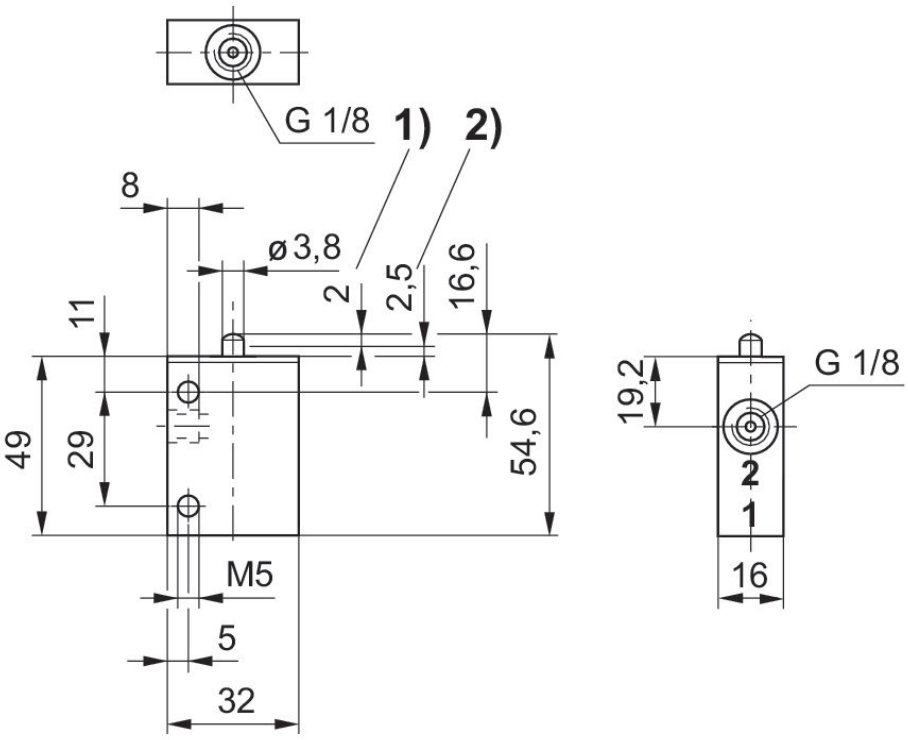


1) Actuating stroke
2) Overstroke
Dimensions of basic valve apply to all types of actuation.

**Actuating force+**

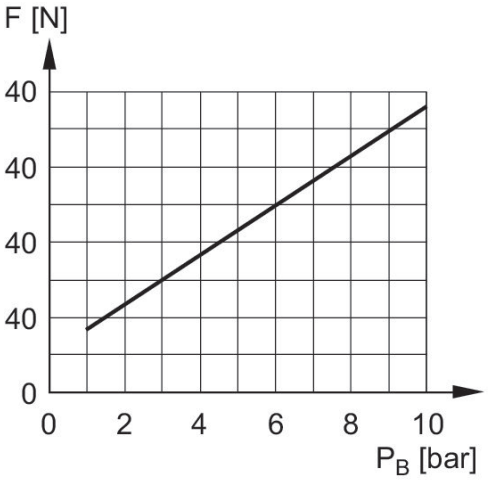


F = actuating force
$P_B$ = Working pressure

## 3/2-directional valve, Series AP

Flow: 190 l/min
Activation: Mechanical
Qn 1 > 2: 190 l/min
Compressed air connection type: Internal thread
Compressed air connection input: M5
Compressed air connection output: M5
Ambient temperature min./max.: -30 °C ... 80 °C
Medium temperature min./max.: -30 °C ... 80 °C
Working pressure min./max.: 0 bar ... 10 bar




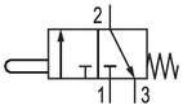


| Actuating element | Switching principle | Compressed air connection input | Compressed air connection output | Part No. |
|---|---|---|---|---|
| Plunger | 3/2, with spring return | M5 | M5 | 0820408001 |

Dimensions in mm

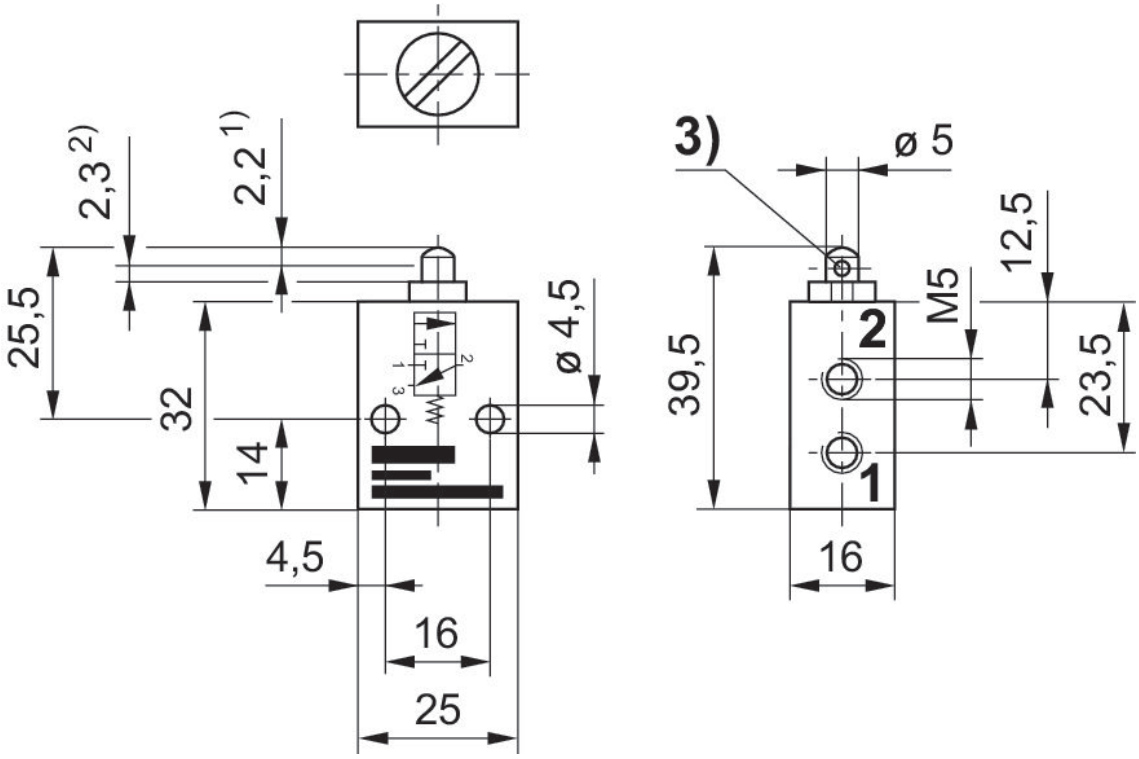


1) Actuating stroke
2) Overstroke
3) Exhaust
Dimensions of basic valve apply to all types of actuation.

**Actuating force+**

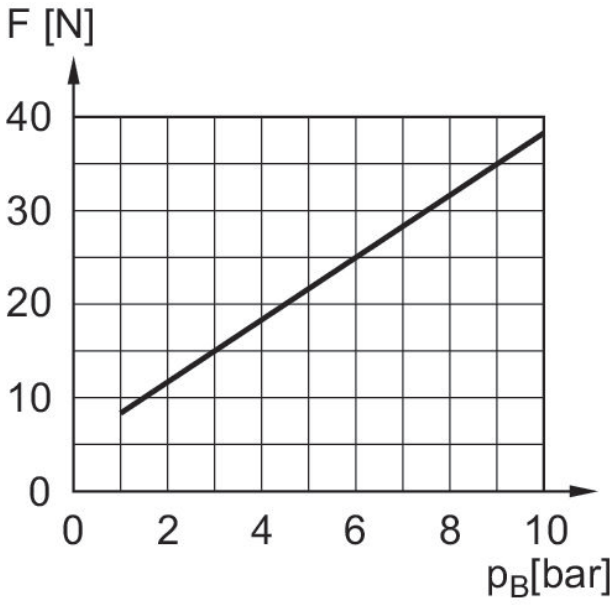


F = actuating force
$P_B$ = Working pressure

## 3/2-directional valve, Series AP

Activation: Mechanical
Qn 1 > 2: 250 l/min
Compressed air connection type: Internal thread
Compressed air connection input: G 1/8
Compressed air connection output: G 1/8
Compressed air connection, exhaust: G 1/8
Ambient temperature min./max.: -30 °C ... 80 °C
Medium temperature min./max.: -30 °C ... 80 °C
Working pressure min./max.: 0 bar ... 10 bar




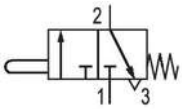


| Actuating element | Switching principle | Compressed air connection input | Compressed air connection output | Compressed air connection, exhaust | Part No. |
|---|---|---|---|---|---|
| Plunger | 3/2, double air pilot | G 1/8 | G 1/8 | G 1/8 | 0820402101 |

Dimensions in mm

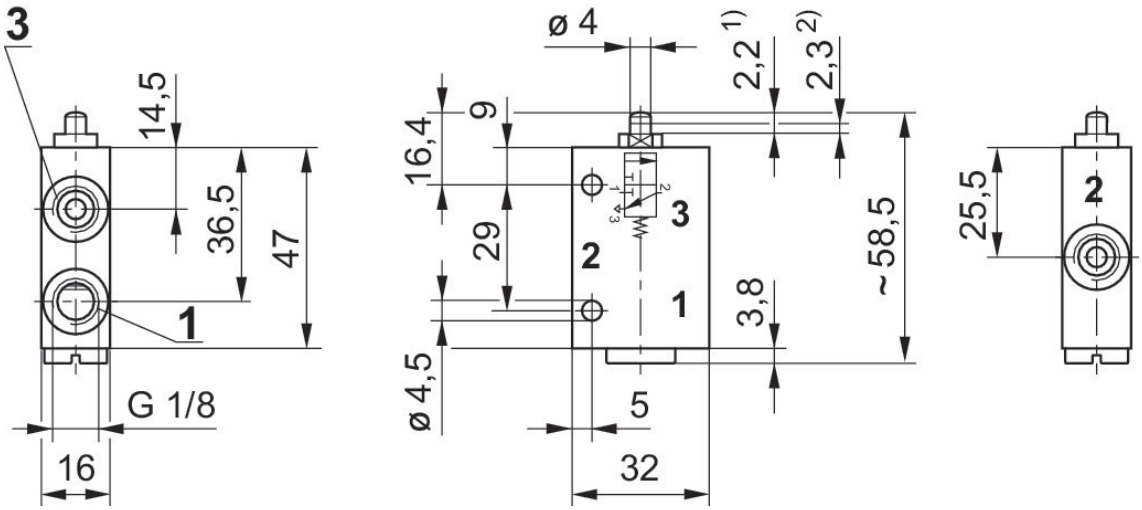


1) Actuating stroke
2) Overstroke
Dimensions of basic valve apply to all types of actuation.

**Actuating force+**

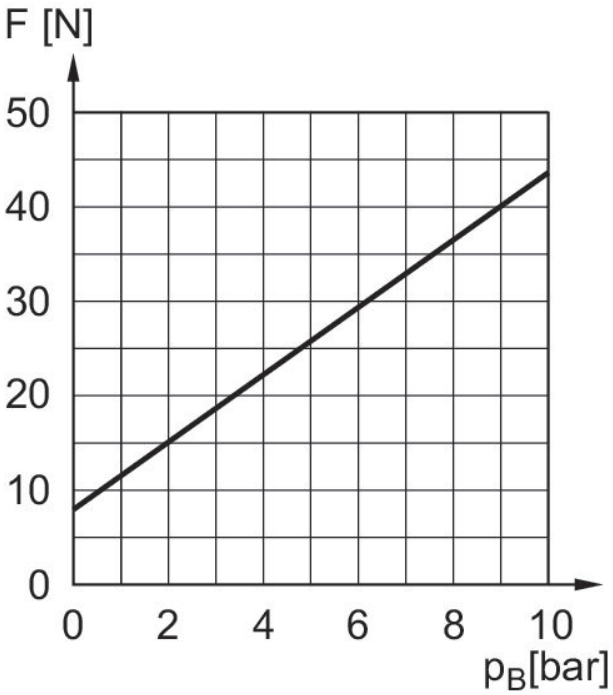


F = actuating force
$P_B$ = Working pressure

## 3/2-directional valve, Series AP

Activation: Mechanical
Compressed air connection type: Internal thread
Compressed air connection input: G 1/4
Compressed air connection output: G 1/4
Compressed air connection, exhaust: G 1/4
Ambient temperature min./max.: -30 °C ... 80 °C
Medium temperature min./max.: -30 °C ... 80 °C
Working pressure min./max.: 0 bar ... 10 bar



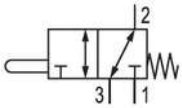


| Actuating element | Switching principle | Compressed air connection input | Compressed air connection output | Compressed air connection, exhaust | Part No. |
|---|---|---|---|---|---|
| Plunger | 3/2, with spring return | G 1/4 | G 1/4 | G 1/4 | 0820400001 |

Dimensions in mm

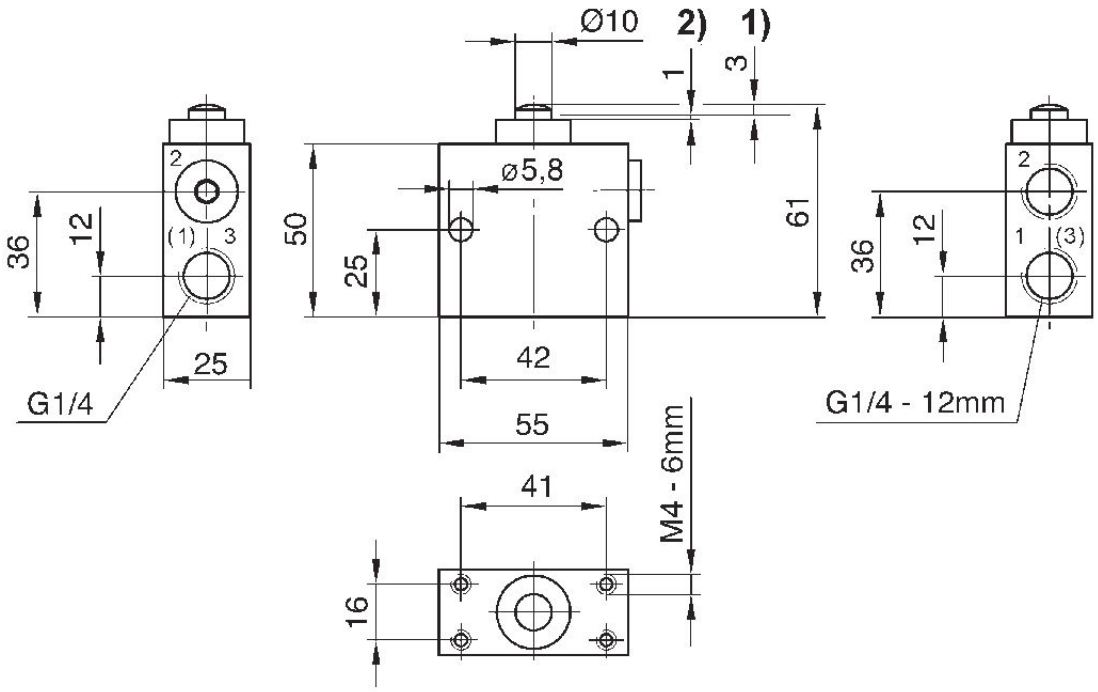


1) Actuating stroke
2) Overstroke
Dimensions of basic valve apply to all types of actuation.

**Actuating force+**

**Compressed air at port 3**

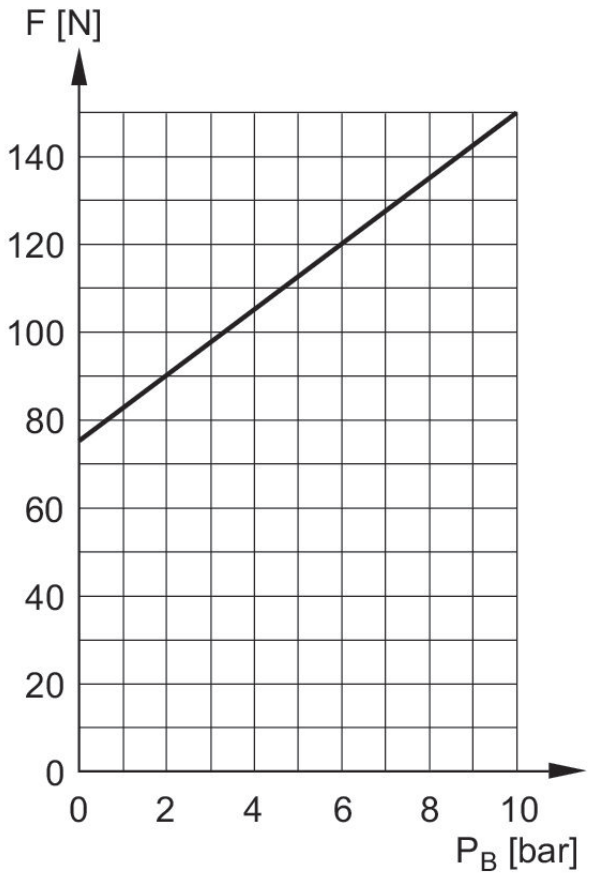


F = actuating force
$P_B$ = Working pressure

**Actuating force+**

**Compressed air at port 1**

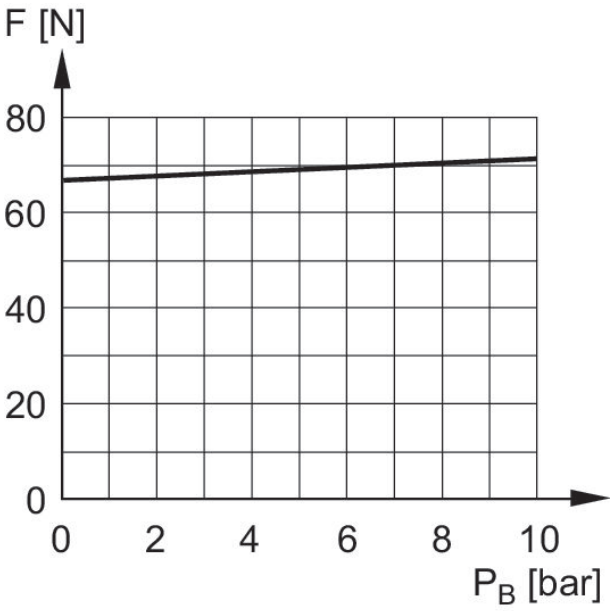


F = actuating force
$P_B$ = Working pressure

## 4/2-directional valve, Series AP

Flow: 550 l/min
Activation: Mechanical
Compressed air connection type: Internal thread
Compressed air connection input: G 1/4
Compressed air connection output: G 1/4
Compressed air connection, exhaust: G 1/4
Ambient temperature min./max.: -30 °C ... 80 °C
Medium temperature min./max.: -30 °C ... 80 °C
Working pressure min./max.: 0 bar ... 10 bar



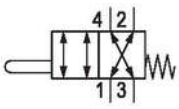


| Actuating element | Switching principle | Compressed air connection input | Compressed air connection output | Compressed air connection, exhaust | Part No. |
|---|---|---|---|---|---|
| Plunger | 4/2, with spring return | G 1/4 | G 1/4 | G 1/4 | 0820401001 |

Dimensions in mm

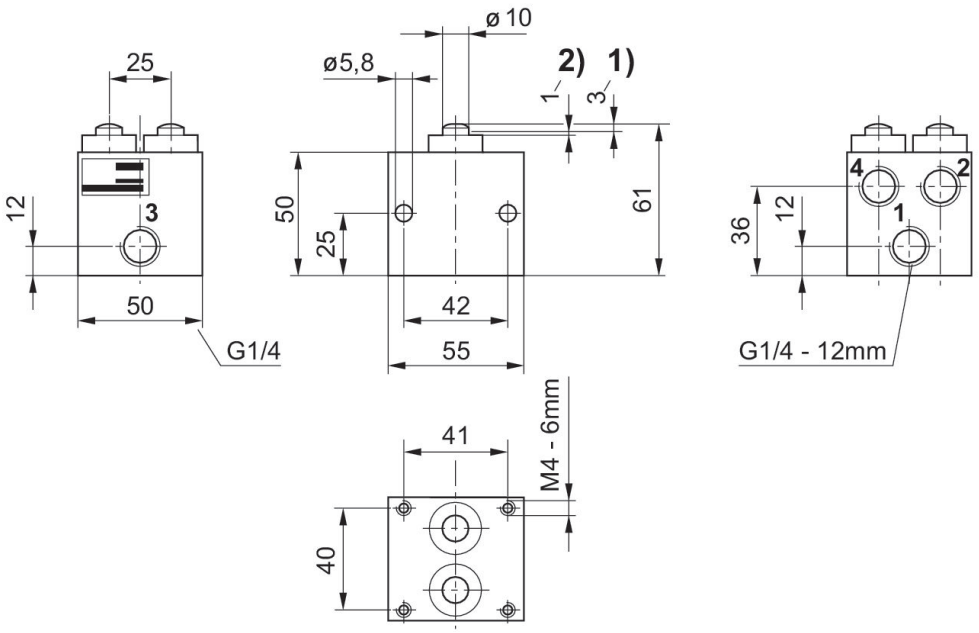


1) Actuating stroke
2) Overstroke
Dimensions of basic valve apply to all types of actuation.

### Actuating force+

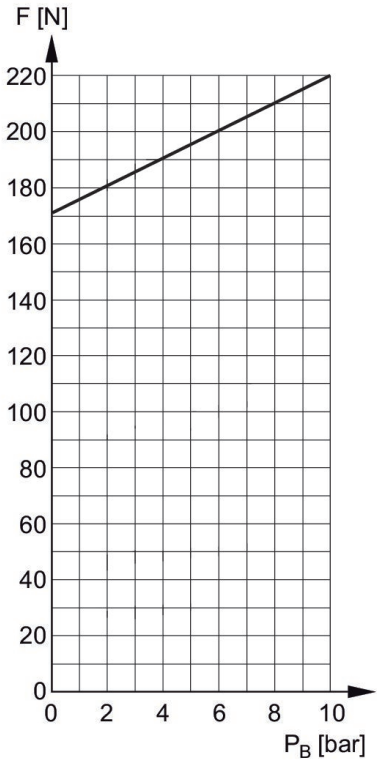


F = actuating force
$P_B$ = Working pressure

## 2/2-directional valve, Series AP

Flow: 350 l/min
Activation: Mechanical
Qn 1 > 2: 350 l/min
Compressed air connection type: Internal thread
Compressed air connection input: G 1/8
Compressed air connection output: G 1/8
Ambient temperature min./max.: -30 °C ... 80 °C
Medium temperature min./max.: -30 °C ... 80 °C
Working pressure min./max.: 0 bar ... 10 bar



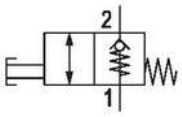


| Actuating element | Switching principle | Compressed air connection input | Compressed air connection output | Part No. |
|---|---|---|---|---|
| Push button | 2/2, with spring return | G 1/8 | G 1/8 | 0820404023 |

Dimensions in mm

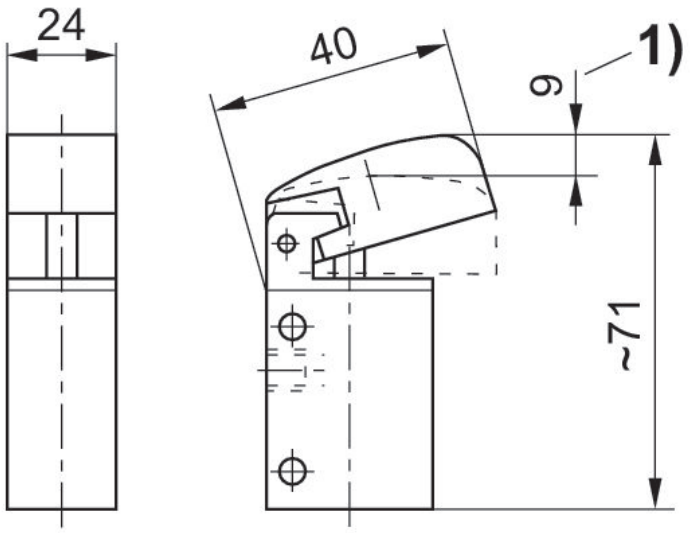


1) Actuating stroke

**Actuating force+**

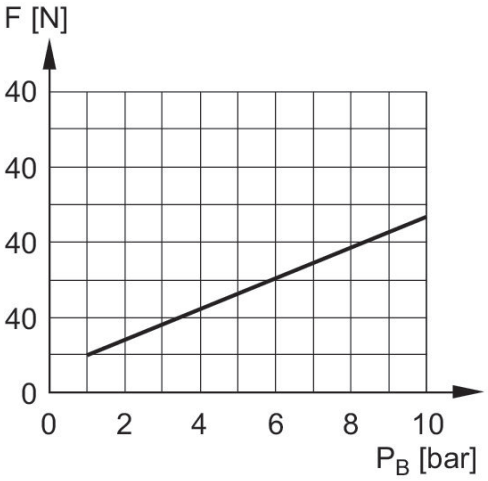


F = actuating force
$P_B$ = Working pressure

## 3/2-directional valve, Series AP

Flow: 190 l/min
Activation: Mechanical
Qn 1 > 2: 190 l/min
Compressed air connection type: Internal thread
Compressed air connection input: M5
Compressed air connection output: M5
Ambient temperature min./max.: -30 °C ... 80 °C
Medium temperature min./max.: -30 °C ... 80 °C
Working pressure min./max.: 0 bar ... 10 bar



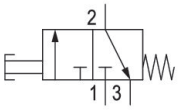


| Actuating element | Switching principle | Compressed air connection input | Compressed air connection output | Part No. |
|---|---|---|---|---|
| Push button | 3/2, with spring return | M5 | M5 | 0820408004 |

Dimensions in mm

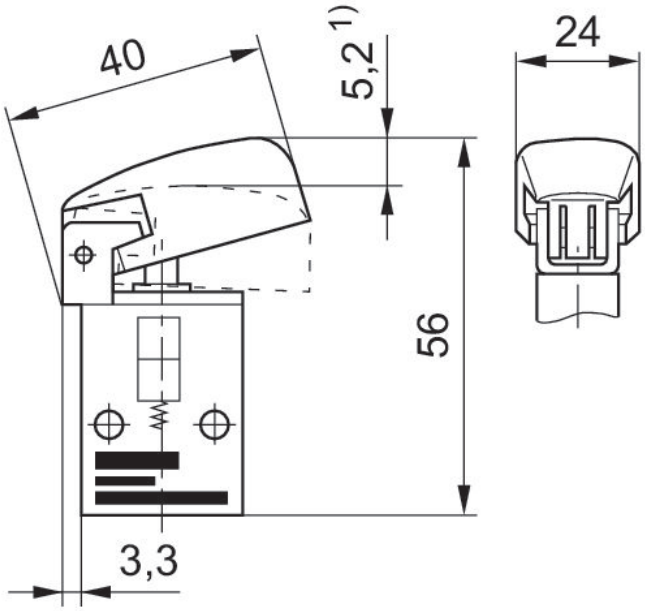


1) Actuating stroke

**Actuating force+**

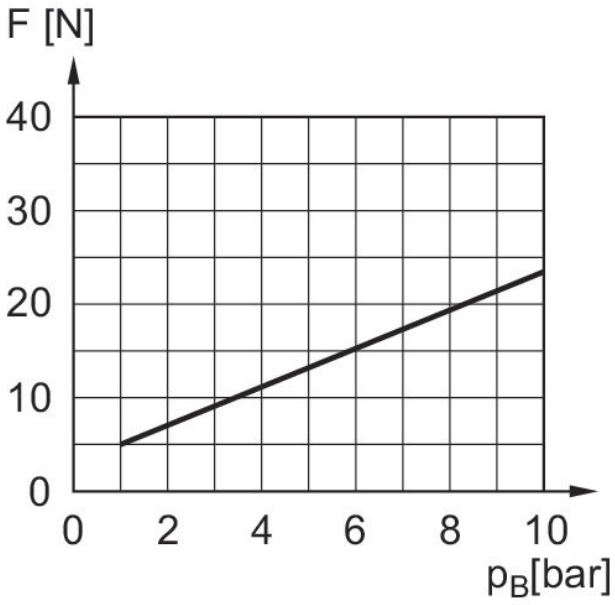


F = actuating force
$P_B$ = Working pressure

## 3/2-directional valve, Series AP

Activation: Mechanical
Qn 1 > 2: 250 l/min
Compressed air connection type: Internal thread
Compressed air connection input: G 1/8
Compressed air connection output: G 1/8
Compressed air connection, exhaust: G 1/8
Ambient temperature min./max.: -30 °C ... 80 °C
Medium temperature min./max.: -30 °C ... 80 °C
Working pressure min./max.: 0 bar ... 10 bar



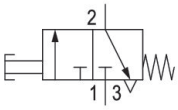


| Actuating element | Switching principle | Compressed air connection input | Compressed air connection output | Compressed air connection, exhaust | Part No. |
|---|---|---|---|---|---|
| Push button | 3/2, double air pilot | G 1/8 | G 1/8 | G 1/8 | 0820402104 |

Dimensions in mm

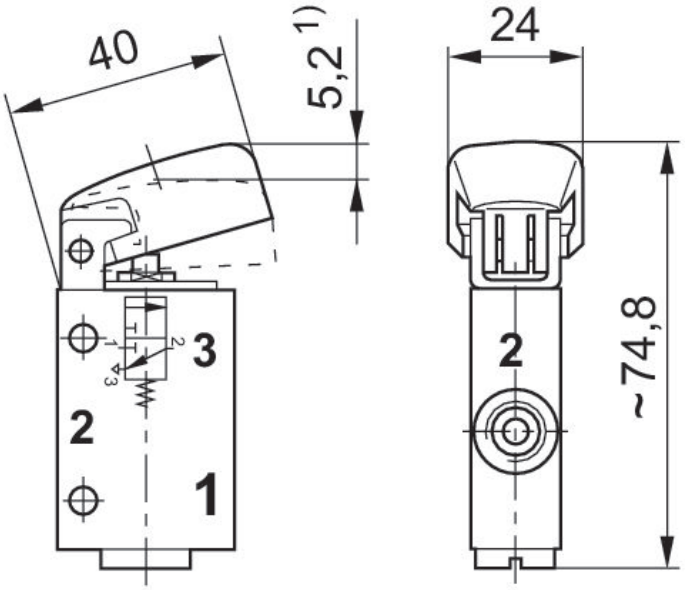


1) Actuating stroke

**Actuating force+**

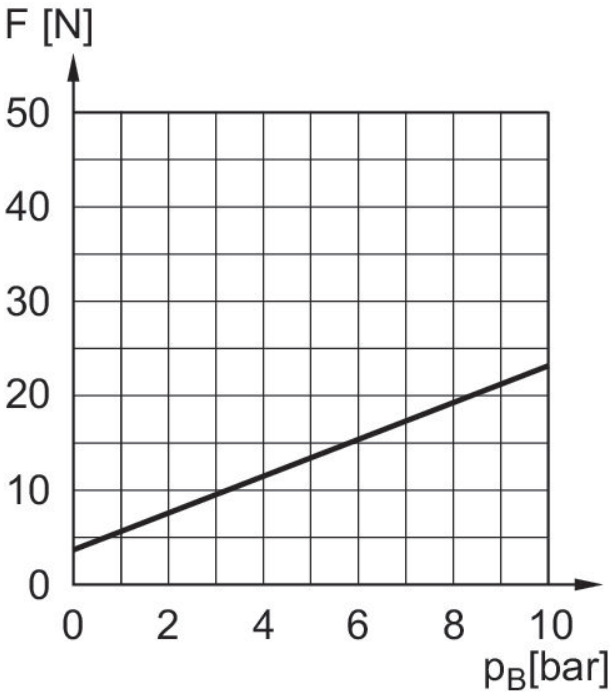


F = actuating force
$P_B$ = Working pressure

## 3/2-directional valve, Series AP

Flow: 550 l/min
Activation: Mechanical
Compressed air connection type: Internal thread
Compressed air connection input: G 1/4
Compressed air connection output: G 1/4
Compressed air connection, exhaust: G 1/4
Ambient temperature min./max.: -30 °C ... 80 °C
Medium temperature min./max.: -30 °C ... 80 °C
Working pressure min./max.: 0 bar ... 10 bar



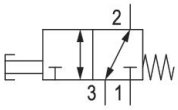


| Actuating element | Switching principle | Compressed air connection input | Compressed air connection output | Compressed air connection, exhaust | Part No. |
|---|---|---|---|---|---|
| Push button | 3/2, with spring return | G 1/4 | G 1/4 | G 1/4 | 0820400004 |

Dimensions in mm

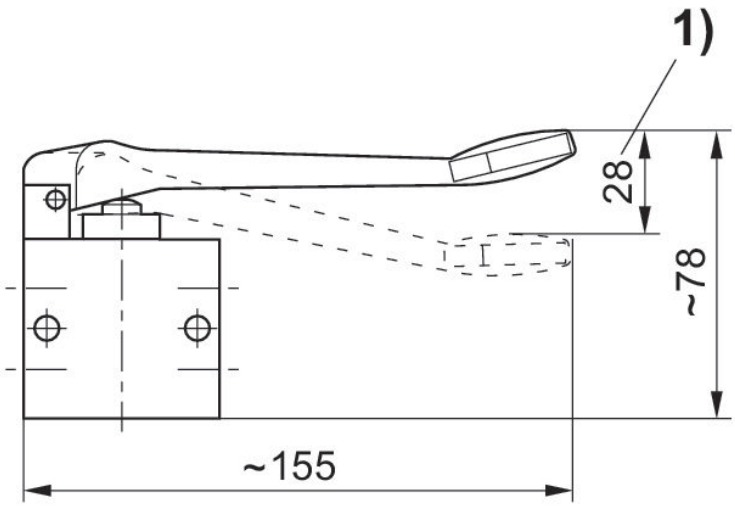


1) Actuating stroke

**Actuating force+**

**Compressed air at port 3**

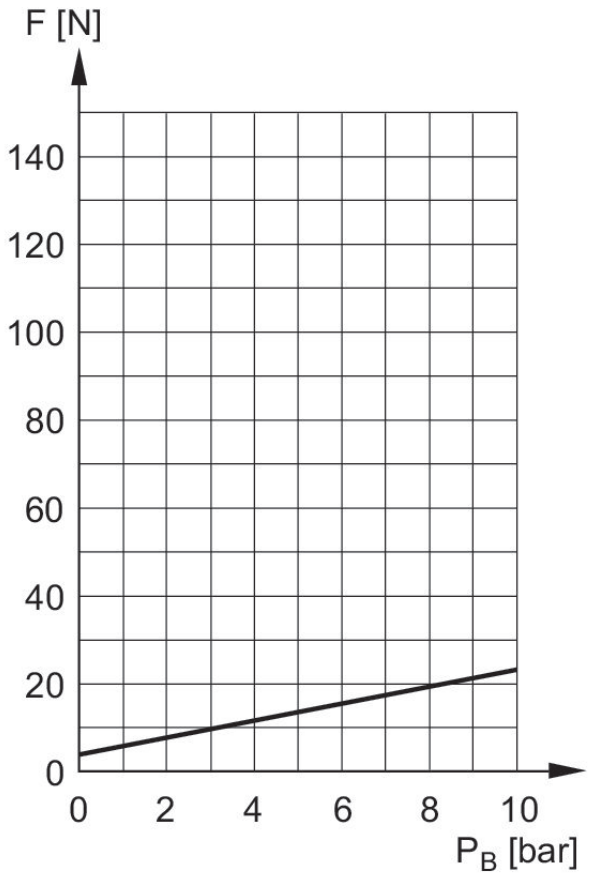


F = actuating force
$P_B$ = Working pressure

**Actuating force+**

**Compressed air at port 1**

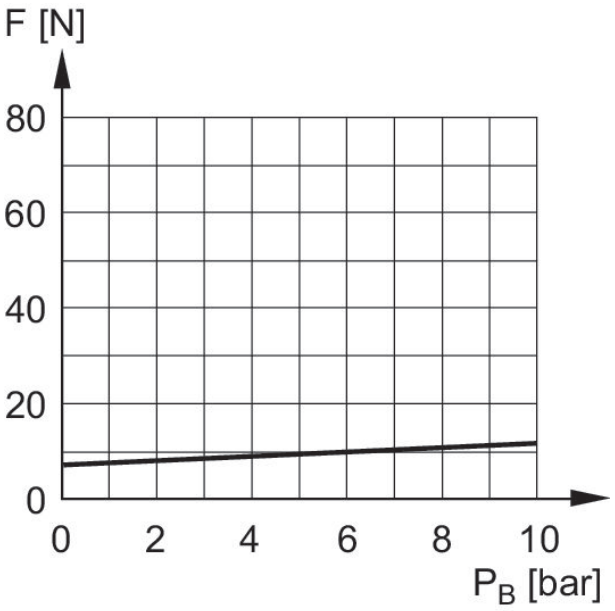


F = actuating force
$P_B$ = Working pressure

## 4/2-directional valve, Series AP

Flow: 550 l/min
Activation: Mechanical
Compressed air connection type: Internal thread
Compressed air connection input: G 1/4
Compressed air connection output: G 1/4
Compressed air connection, exhaust: G 1/4
Ambient temperature min./max.: -30 °C ... 80 °C
Medium temperature min./max.: -30 °C ... 80 °C
Working pressure min./max.: 0 bar ... 10 bar



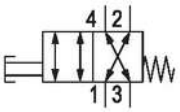


| Actuating element | Switching principle | Compressed air connection input | Compressed air connection output | Compressed air connection, exhaust | Part No. |
|---|---|---|---|---|---|
| Push button | 4/2, with spring return | G 1/4 | G 1/4 | G 1/4 | 0820401004 |

Dimensions in mm

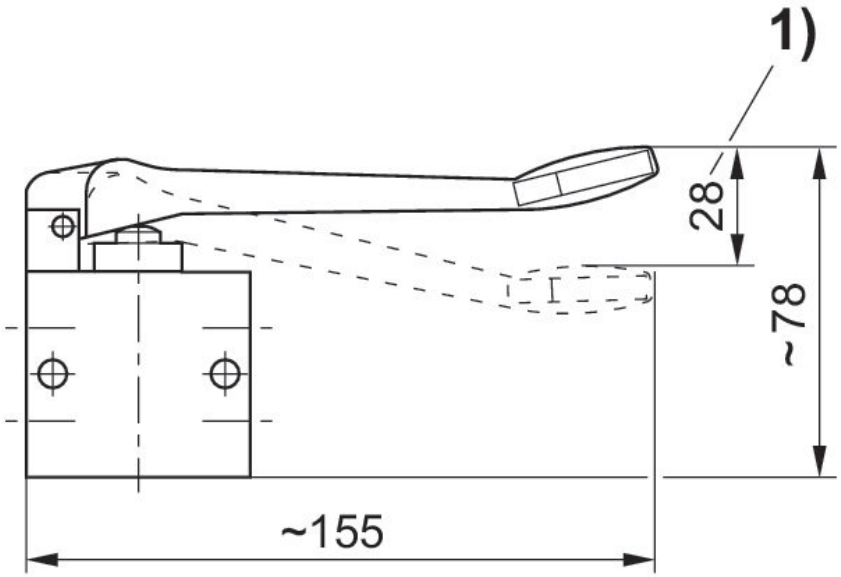


1) Actuating stroke

**Actuating force+**

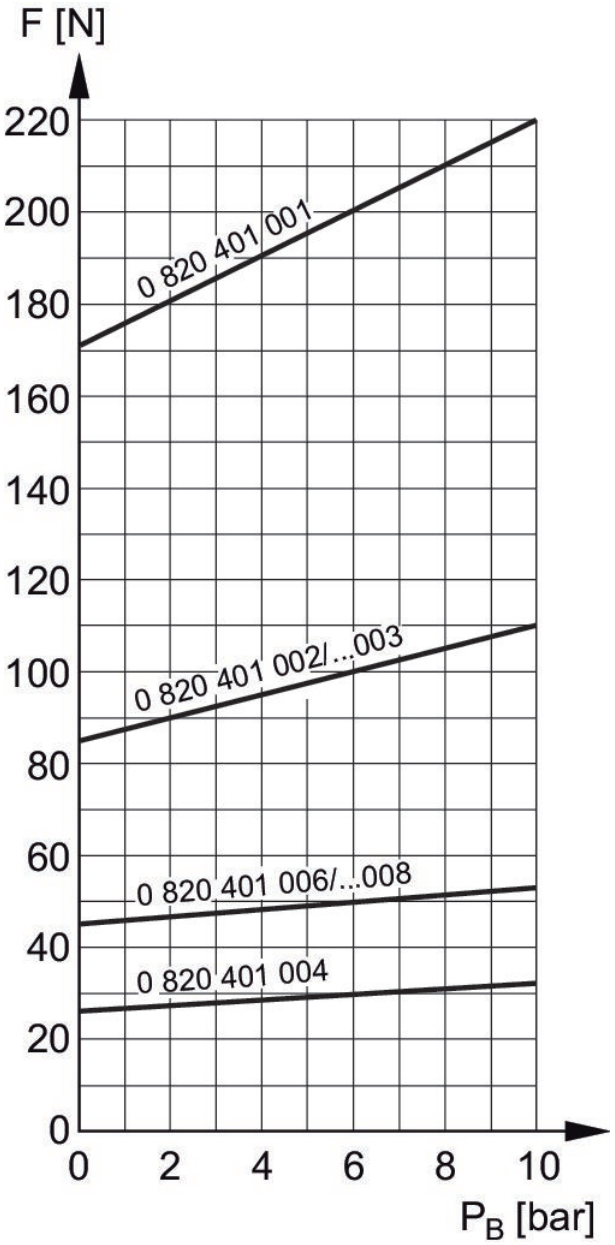


F = actuating force
$P_B$ = Working pressure

## 2/2-directional valve, Series AP

Flow: 350 l/min
Activation: Mechanical
Qn 1 > 2: 350 l/min
Compressed air connection type: Internal thread
Compressed air connection input: G 1/8
Compressed air connection output: G 1/8
Ambient temperature min./max.: -30 °C ... 80 °C
Medium temperature min./max.: -30 °C ... 80 °C
Working pressure min./max.: 0 bar ... 10 bar



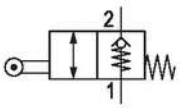


| Actuating element | Switching principle | Compressed air connection input | Compressed air connection output | Part No. |
|---|---|---|---|---|
| Roller | 2/2, with spring return | G 1/8 | G 1/8 | 0820404021 |

Dimensions in mm

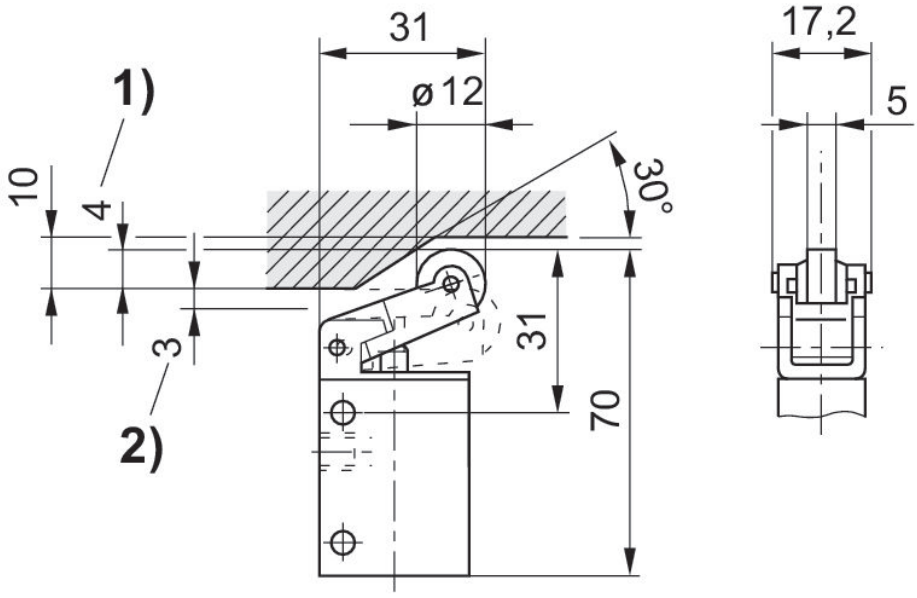


1) Actuating stroke
2) Overstroke

**Actuating force+**

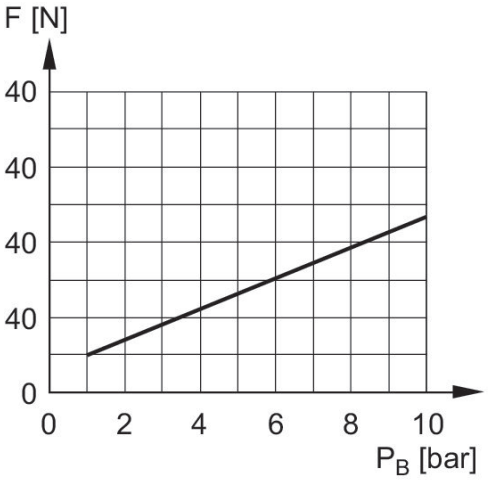


F = actuating force
$P_B$ = Working pressure

## 2/2-directional valve, Series AP

Flow: 350 l/min
Activation: Mechanical
Qn 1 > 2: 350 l/min
Compressed air connection type: Internal thread
Compressed air connection input: G 1/8
Compressed air connection output: G 1/8
Ambient temperature min./max.: -30 °C ... 80 °C
Medium temperature min./max.: -30 °C ... 80 °C
Working pressure min./max.: 0 bar ... 10 bar



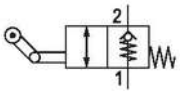


| Actuating element | Switching principle | Compressed air connection input | Compressed air connection output | Part No. |
|---|---|---|---|---|
| Roller lever, one-way trip | 2/2, with spring return | G 1/8 | G 1/8 | 0820404022 |

Dimensions in mm

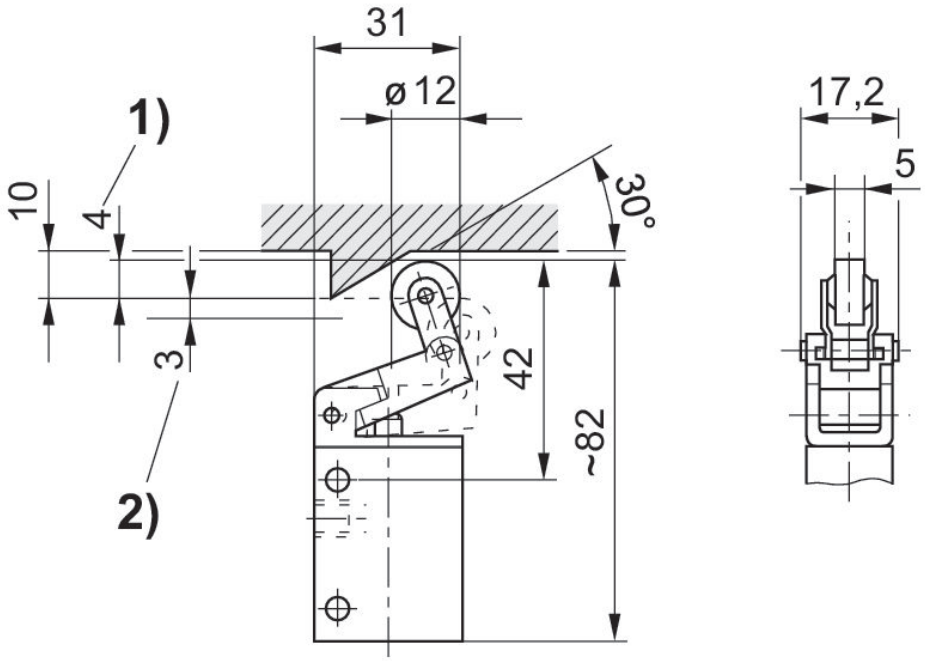


1) Actuating stroke
2) Overstroke

**Actuating force+**

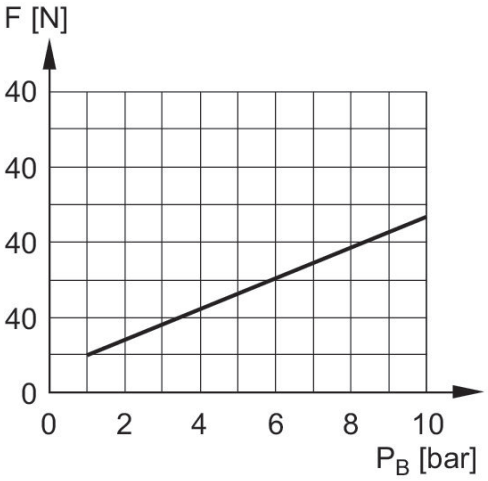


F = actuating force
$P_B$ = Working pressure

## 3/2-directional valve, Series AP

Flow: 190 l/min
Activation: Mechanical
Qn 1 > 2: 190 l/min
Compressed air connection type: Internal thread
Compressed air connection input: M5
Compressed air connection output: M5
Ambient temperature min./max.: -30 °C ... 80 °C
Medium temperature min./max.: -30 °C ... 80 °C
Working pressure min./max.: 0 bar ... 10 bar



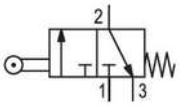


| Actuating element | Switching principle | Compressed air connection input | Compressed air connection output | Part No. |
|---|---|---|---|---|
| Roller | 3/2, with spring return | M5 | M5 | 0820408002 |

Dimensions in mm

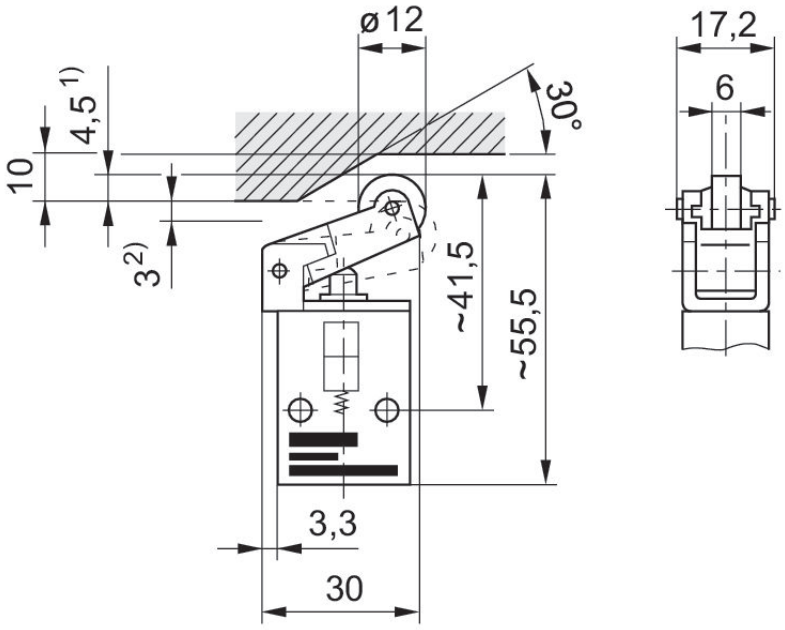


1) Actuating stroke
2) Overstroke

**Actuating force+**

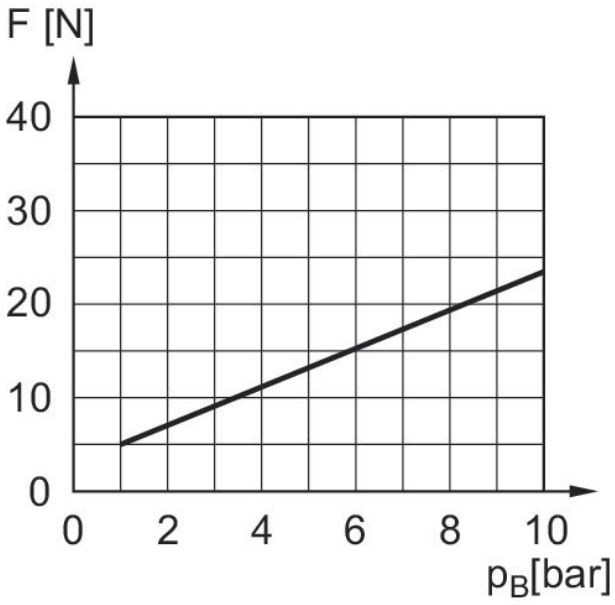


F = actuating force
$P_B$ = Working pressure

## 3/2-directional valve, Series AP

Flow: 190 l/min
Activation: Mechanical
Qn 1 > 2: 190 l/min
Compressed air connection type: Internal thread
Compressed air connection input: M5
Compressed air connection output: M5
Ambient temperature min./max.: -30 °C ... 80 °C
Medium temperature min./max.: -30 °C ... 80 °C
Working pressure min./max.: 0 bar ... 10 bar



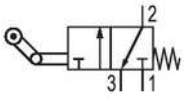


| Actuating element | Switching principle | Compressed air connection input | Compressed air connection output | Part No. |
|---|---|---|---|---|
| Roller lever, one-way trip | 3/2, with spring return | M5 | M5 | 0820408003 |

Dimensions in mm

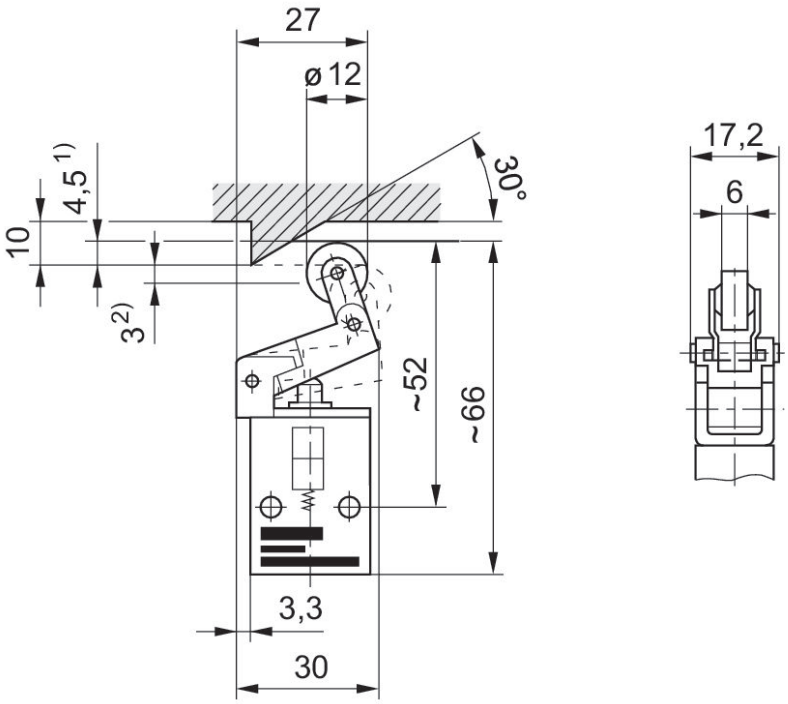


1) Actuating stroke
2) Overstroke

**Actuating force+**

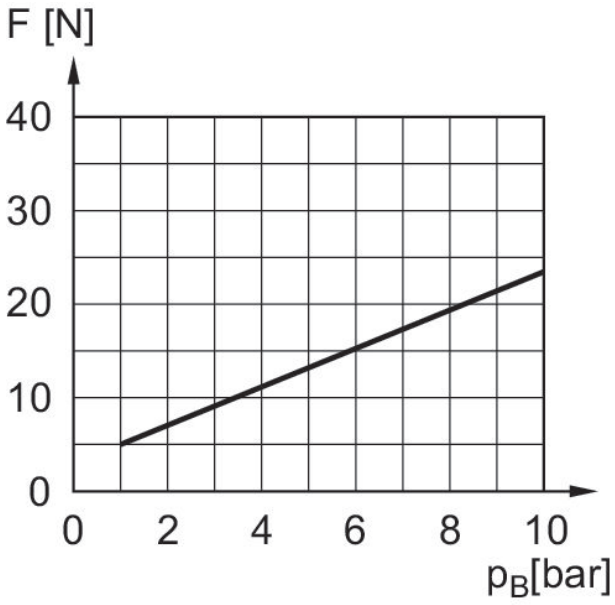


F = actuating force
$P_B$ = Working pressure

## 3/2-directional valve, Series AP

Activation: Mechanical
Qn 1 > 2: 250 l/min
Compressed air connection type: Internal thread
Compressed air connection input: G 1/8
Compressed air connection output: G 1/8
Compressed air connection, exhaust: G 1/8
Ambient temperature min./max.: -30 °C ... 80 °C
Medium temperature min./max.: -30 °C ... 80 °C
Working pressure min./max.: 0 bar ... 10 bar



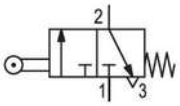


| Actuating element | Switching principle | Compressed air connection input | Compressed air connection output | Compressed air connection, exhaust | Part No. |
|---|---|---|---|---|---|
| Roller | 3/2, double air pilot | G 1/8 | G 1/8 | G 1/8 | 0820402102 |

Dimensions in mm

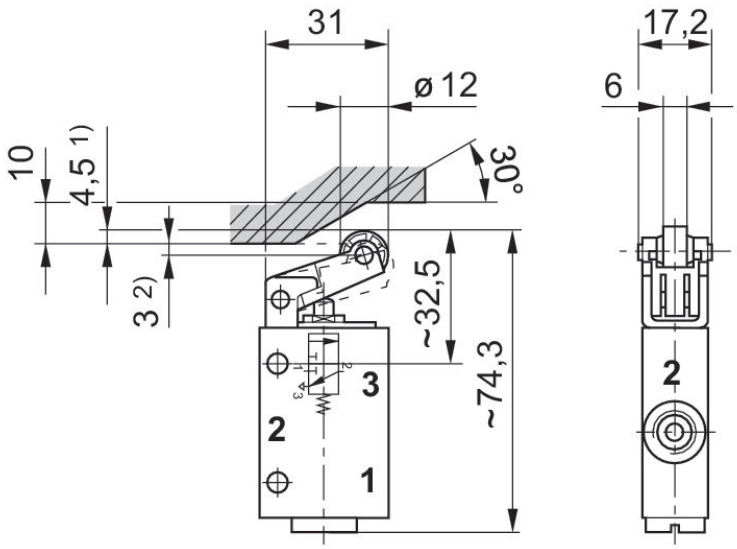


1) Actuating stroke
2) Overstroke

**Actuating force+**

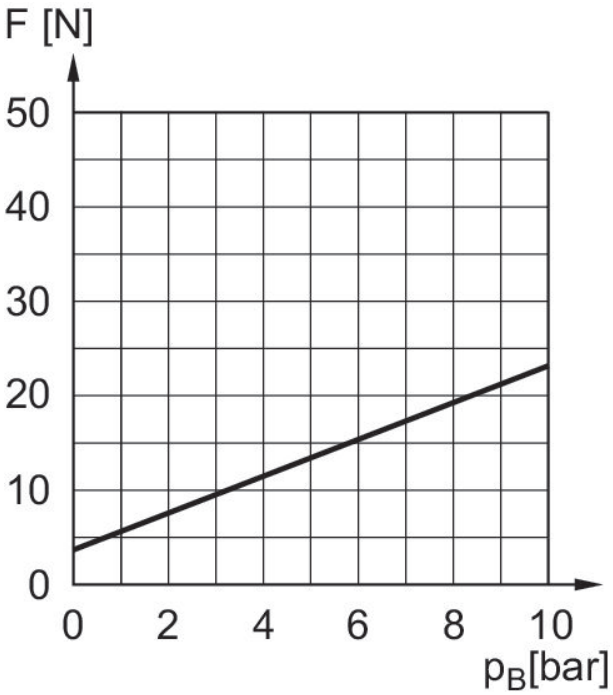


F = actuating force
$P_B$ = Working pressure

## 3/2-directional valve, Series AP

Activation: Mechanical
Qn 1 > 2: 250 l/min
Compressed air connection type: Internal thread
Compressed air connection input: G 1/8
Compressed air connection output: G 1/8
Compressed air connection, exhaust: G 1/8
Ambient temperature min./max.: -30 °C ... 80 °C
Medium temperature min./max.: -30 °C ... 80 °C
Working pressure min./max.: 0 bar ... 10 bar



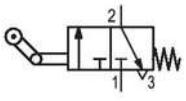

| Actuating element | Switching principle | Compressed air connection input | Compressed air connection output | Compressed air connection, exhaust | Part No. |
|---|---|---|---|---|---|
| Roller lever, one-way trip | 3/2, double air pilot | G 1/8 | G 1/8 | G 1/8 | 0820402103 |

Dimensions in mm

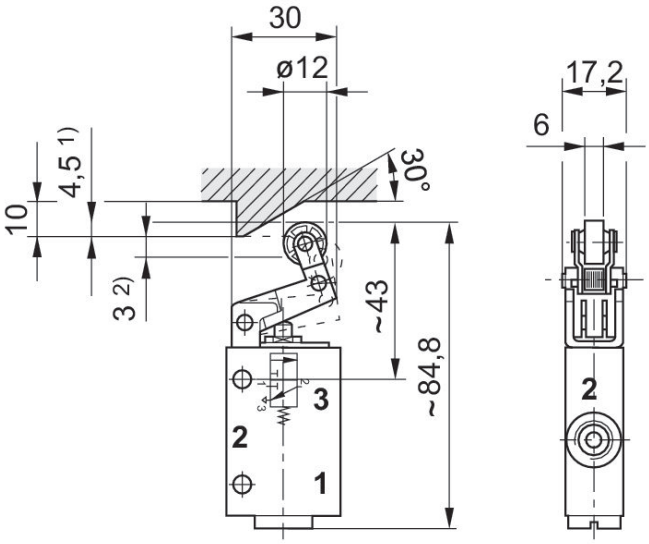


1) Actuating stroke
2) Overstroke

**Actuating force+**

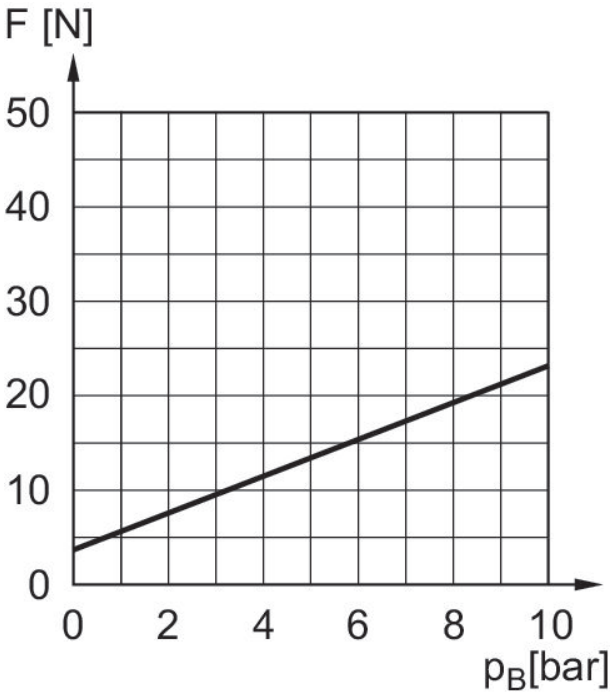


F = actuating force
$P_B$ = Working pressure

## 3/2-directional valve, Series AP

Activation: Mechanical
Compressed air connection type: Internal thread
Compressed air connection input: G 1/4
Compressed air connection output: G 1/4
Compressed air connection, exhaust: G 1/4
Ambient temperature min./max.: -30 °C ... 80 °C
Medium temperature min./max.: -30 °C ... 80 °C
Working pressure min./max.: 0 bar ... 10 bar



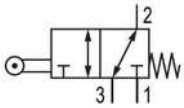


| Actuating element | Switching principle | Compressed air connection input | Compressed air connection output | Compressed air connection, exhaust | Part No. |
|---|---|---|---|---|---|
| Roller | 3/2, with spring return | G 1/4 | G 1/4 | G 1/4 | 0820400002 |

Dimensions in mm

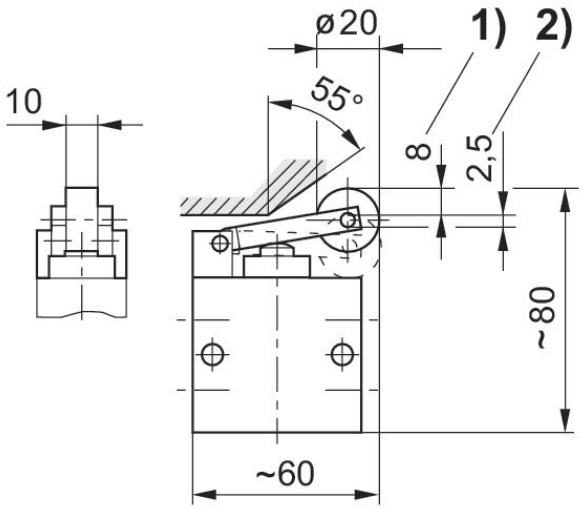


1) Actuating stroke
2) Overstroke

**Actuating force+**

**Compressed air at port 3**

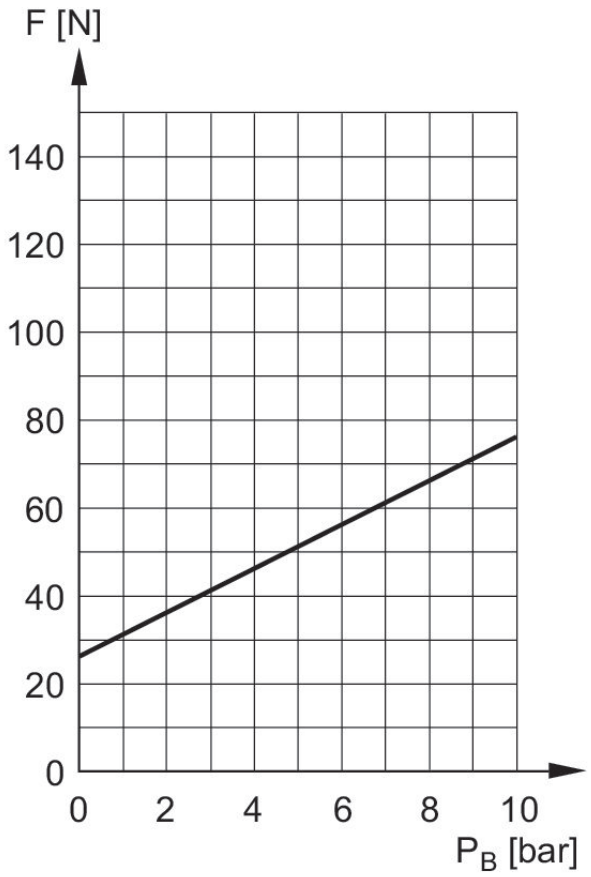


F = actuating force
$P_B$ = Working pressure

**Actuating force+**

**Compressed air at port 1**

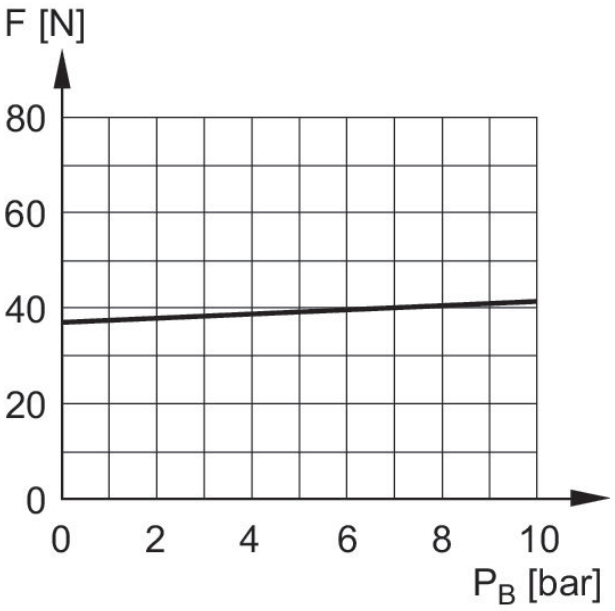


F = actuating force
$P_B$ = Working pressure

## 3/2-directional valve, Series AP

Flow: 550 l/min
Activation: Mechanical
Compressed air connection type: Internal thread
Compressed air connection input: G 1/4
Compressed air connection output: G 1/4
Compressed air connection, exhaust: G 1/4
Ambient temperature min./max.: -30 °C ... 80 °C
Medium temperature min./max.: -30 °C ... 80 °C
Working pressure min./max.: 0 bar ... 10 bar



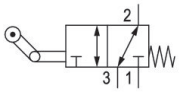


| Actuating element | Switching principle | Compressed air connection input | Compressed air connection output | Compressed air connection, exhaust | Part No. |
|---|---|---|---|---|---|
| Roller lever, one-way trip | 3/2, with spring return | G 1/4 | G 1/4 | G 1/4 | 0820400003 |

Dimensions in mm

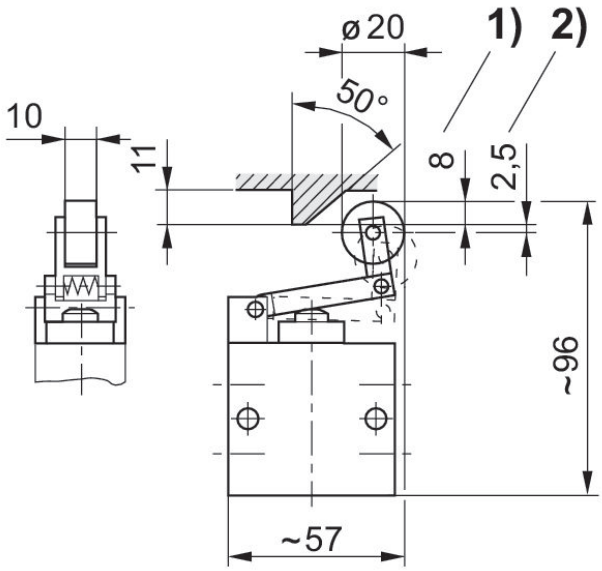


1) Actuating stroke
2) Overstroke

**Actuating force+**

**Compressed air at port 3**

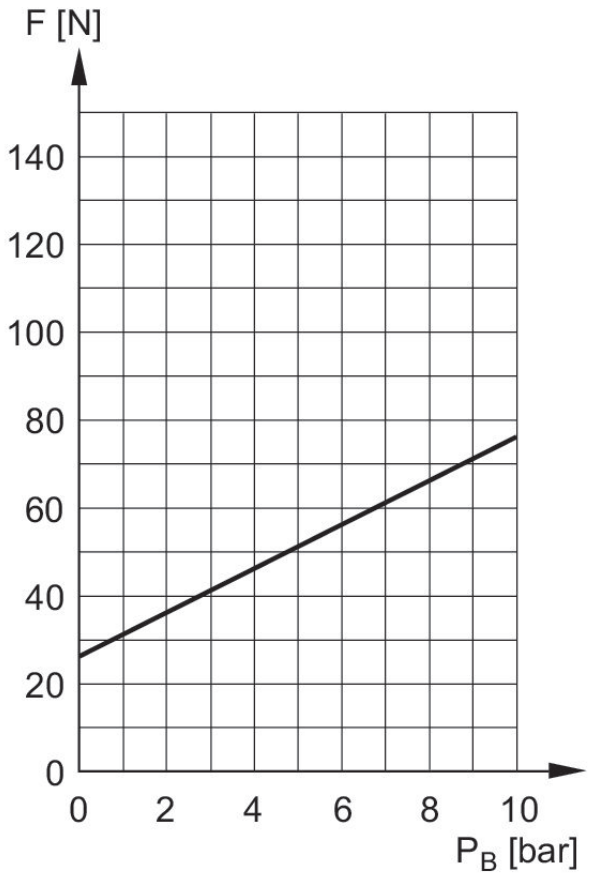


F = actuating force
$P_B$ = Working pressure

**Actuating force+**

**Compressed air at port 1**

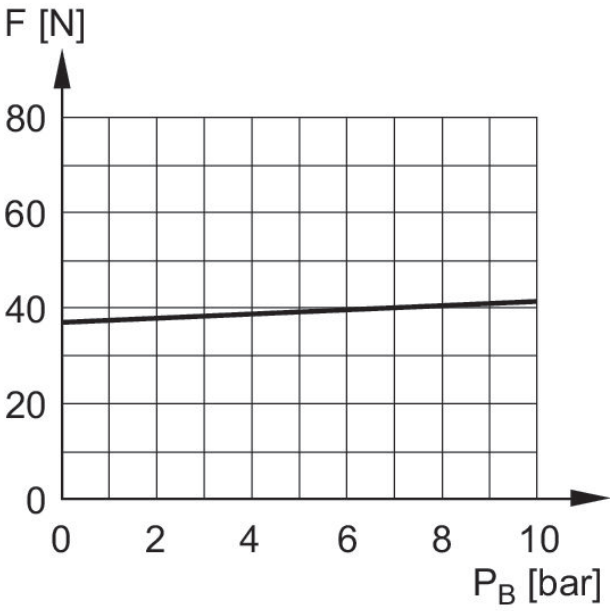


F = actuating force
$P_B$ = Working pressure

## 4/2-directional valve, Series AP

Flow: 550 l/min
Activation: Mechanical
Compressed air connection type: Internal thread
Compressed air connection input: G 1/4
Compressed air connection output: G 1/4
Compressed air connection, exhaust: G 1/4
Ambient temperature min./max.: -30 °C ... 80 °C
Medium temperature min./max.: -30 °C ... 80 °C
Working pressure min./max.: 0 bar ... 10 bar



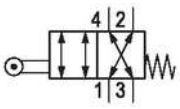


| Actuating element | Switching principle | Compressed air connection input | Compressed air connection output | Compressed air connection, exhaust | Part No. |
|---|---|---|---|---|---|
| Roller | 4/2, with spring return | G 1/4 | G 1/4 | G 1/4 | 0820401002 |

Dimensions in mm

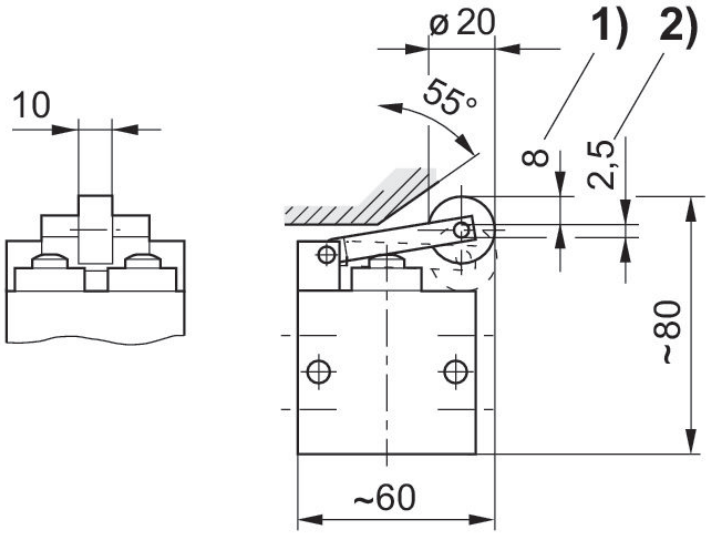


1) Actuating stroke
2) Overstroke

**Actuating force+**

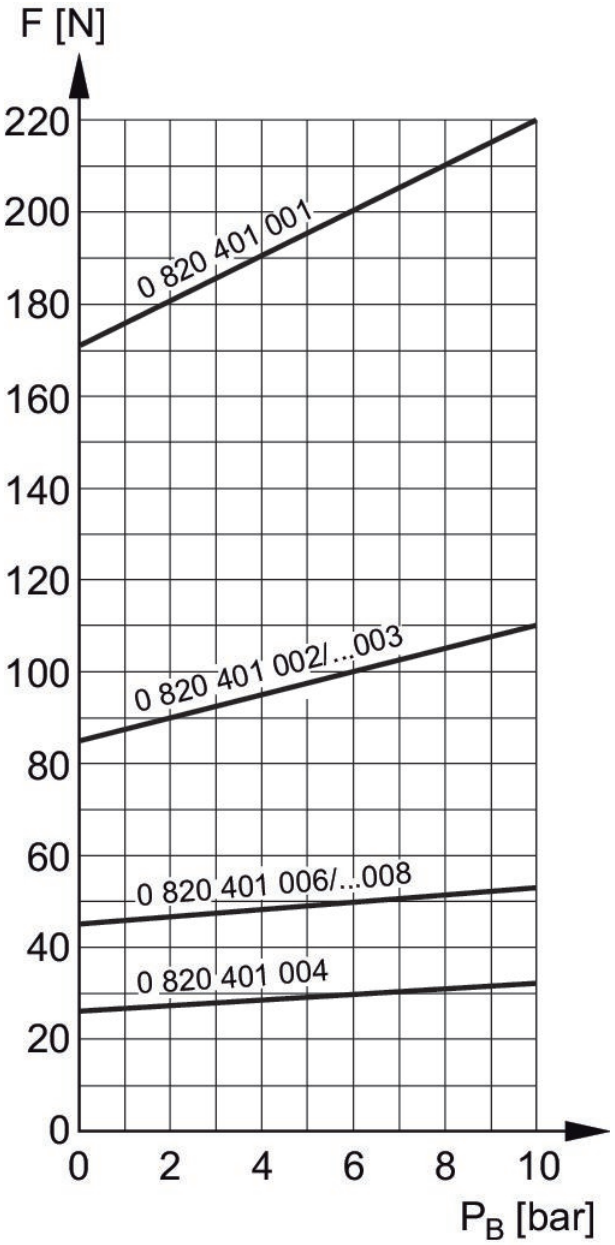


F = actuating force
$P_B$ = Working pressure

## 3/2-directional valve, Series AP

Activation: Mechanical
Qn 1 > 2: 190 l/min
Compressed air connection type: Internal thread
Compressed air connection input: M5
Compressed air connection output: M5
Ambient temperature min./max.: -30 °C ... 80 °C
Medium temperature min./max.: -30 °C ... 80 °C
Working pressure min./max.: 0 bar ... 10 bar



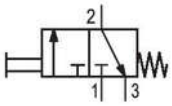


| Actuating element | Switching principle | Compressed air connection input | Compressed air connection output | Part No. |
|---|---|---|---|---|
| panel installation | 3/2, double air pilot | M5 | M5 | R450055451 |

Dimensions in mm

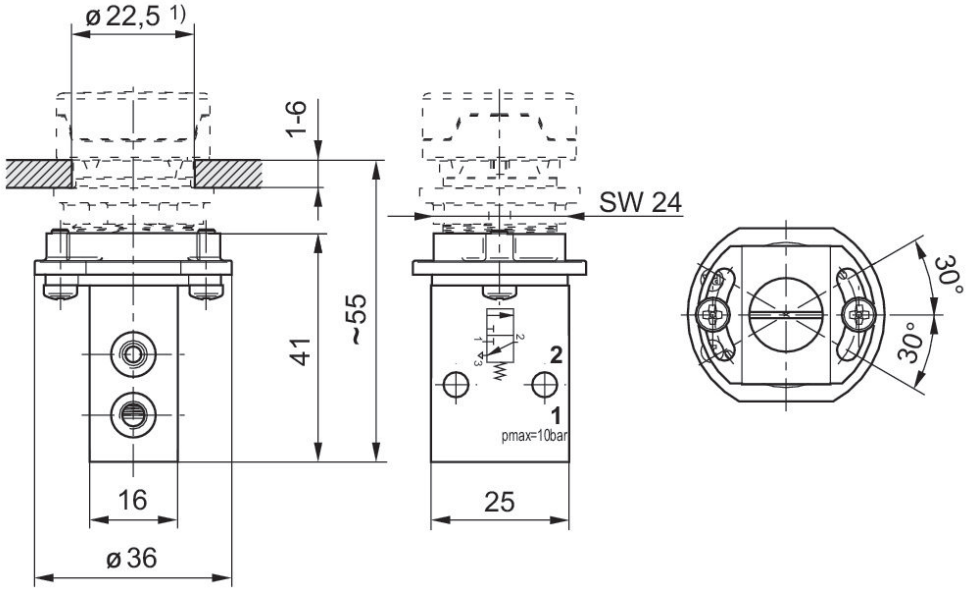


1) cut-out in the front plate

**Actuating force+**

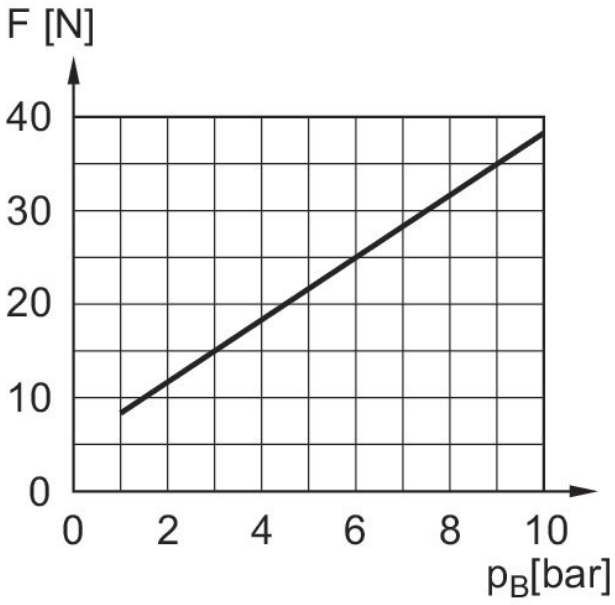


F = actuating force
$P_B$ = Working pressure

## 3/2-directional valve, Series AP

Activation: Mechanical
Qn 1 > 2: 250 l/min
Compressed air connection type: Internal thread
Compressed air connection input: G 1/8
Compressed air connection output: G 1/8
Compressed air connection, exhaust: G 1/8
Ambient temperature min./max.: -30 °C ... 80 °C
Medium temperature min./max.: -30 °C ... 80 °C
Working pressure min./max.: 0 bar ... 10 bar




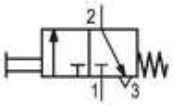


| Actuating element | Switching principle | Compressed air connection input | Compressed air connection output | Compressed air connection, exhaust | Part No. |
|---|---|---|---|---|---|
| panel installation | 3/2, with spring return | G 1/8 | G 1/8 | G 1/8 | R450055452 |

cut-out in the front plate

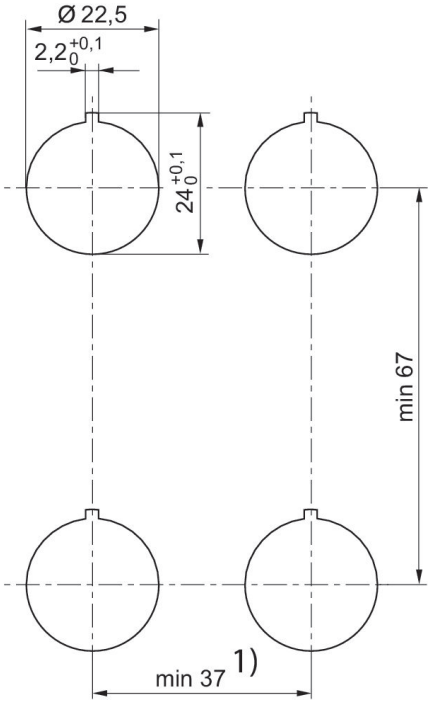


1) For the mushroom buttons (R412012738, R412012739, R412012740) a minimum distance [[41] mm] must be ensured.

Dimensions in mm

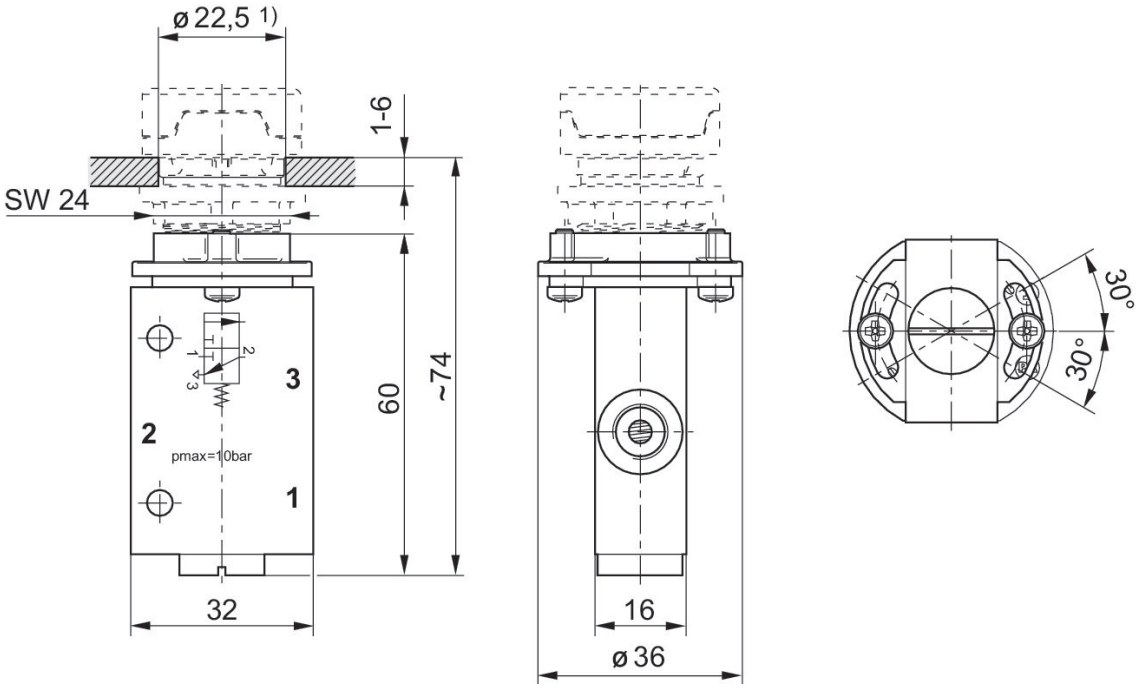


1) cut-out in the front plate

**Actuating force+**

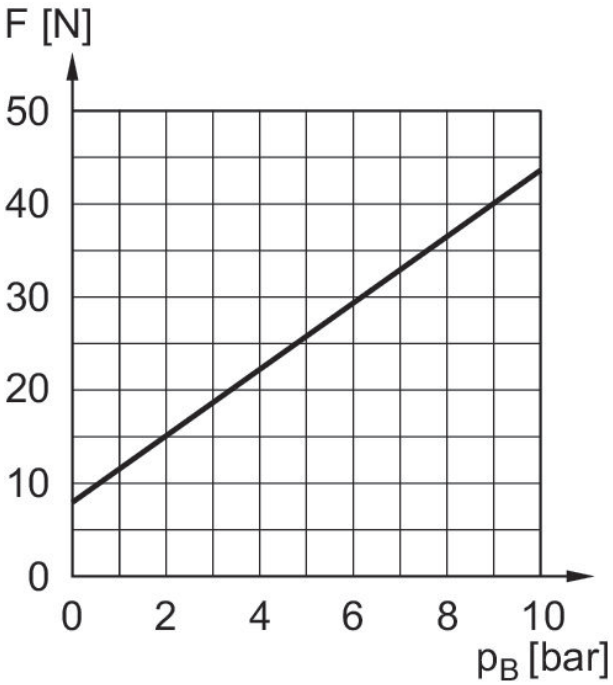


F = actuating force
$P_B$ = Working pressure

## Series AP - inch

Activation: Mechanical
Qn 1 > 2: 250 l/min
Compressed air connection type: Internal thread
Compressed air connection input: G 1/8
Compressed air connection output: G 1/8
Compressed air connection, exhaust: G 1/8
Ambient temperature min./max.: -30 °C ... 80 °C
Medium temperature min./max.: -30 °C ... 80 °C
Working pressure min./max.: 0 bar ... 10 bar



| | Actuating element | Switching principle | Compressed air connection input | Compressed air connection output | Compressed air connection, exhaust | Part No. |
|---|---|---|---|---|---|---|
| 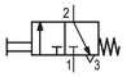 | panel installation | 3/2 | 1/8 NPT | 1/8-27 NPTF | 1/8 NPT | R450055453 |

Dimensions

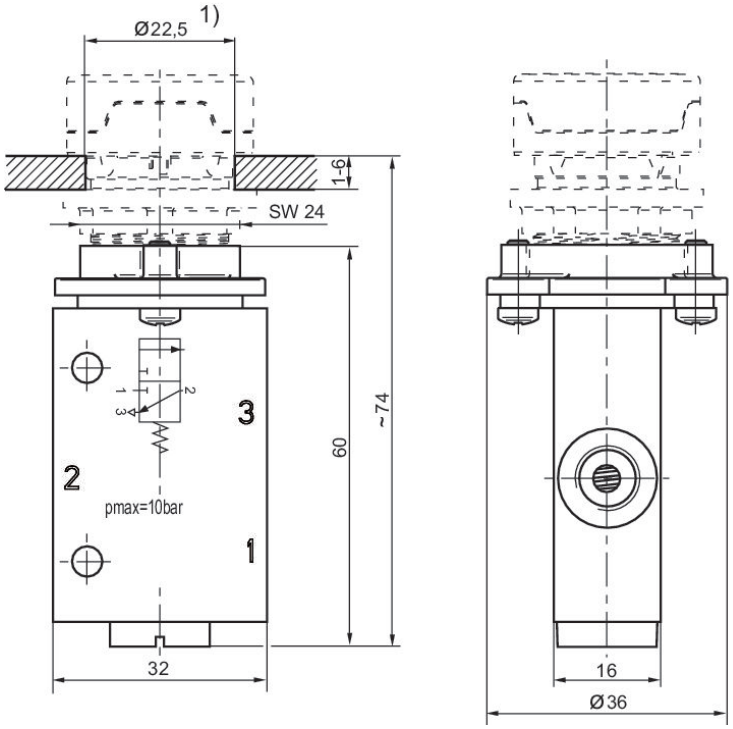


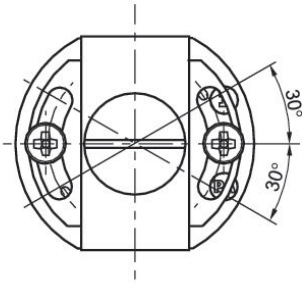


1) cut-out in the front plate

**Actuating force+**

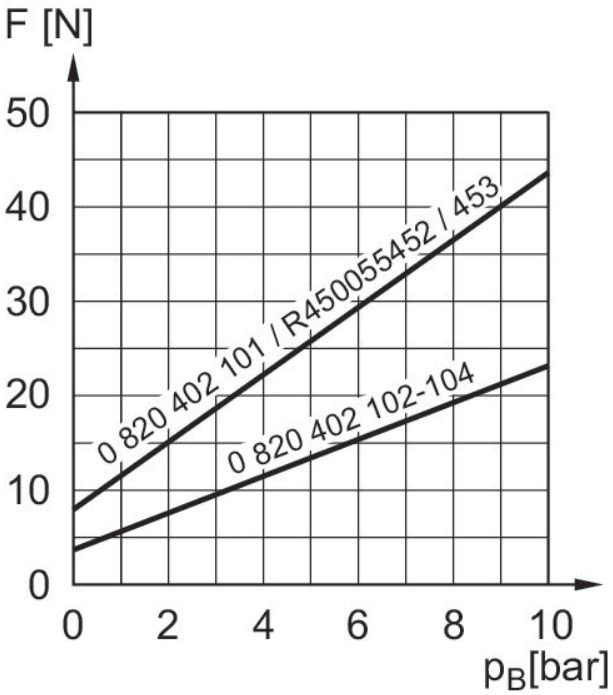


F = actuating force
$P_B$ = Working pressure

## Actuating controls for AP/ST series control panel valves

Ambient temperature min./max.: -30 °C ... 70 °C



| Type | Color | Part No. |
|---|---|---|
| Rotary switch with two notched positions | Red | R412012744 |

Dimensions in mm

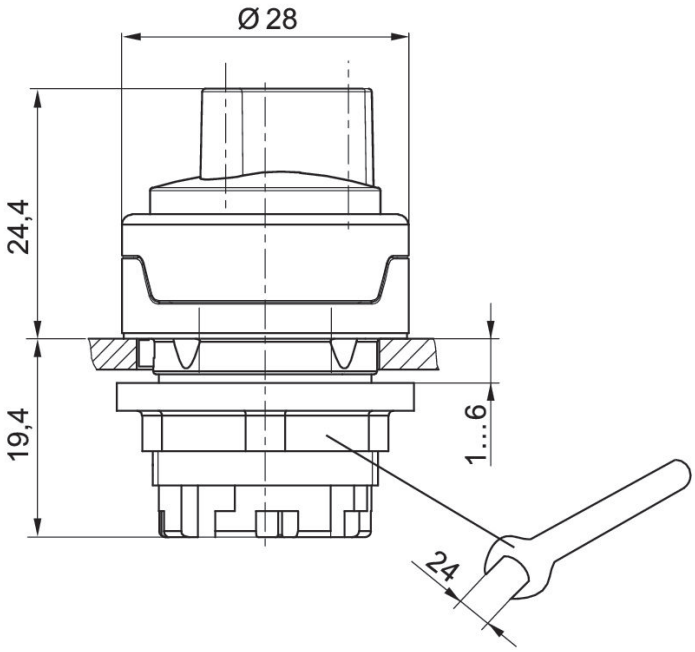

## Actuating controls for AP/ST series control panel valves

Ambient temperature min./max.: -30 °C ... 70 °C



| Type | Color | Part No. |
|---|---|---|
| Rotary switch with two notched positions | Grey | R412012745 |

Dimensions in mm

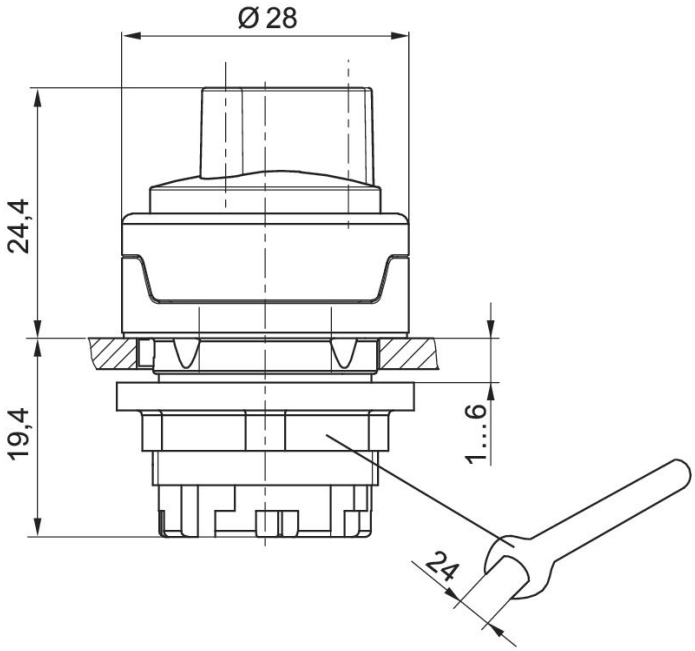

## Actuating controls for AP/ST series control panel valves

Ambient temperature min./max.: -30 °C ... 70 °C



| Type | Note | Color | Part No. |
|---|---|---|---|
| Rotary lock with two keys | The key can be removed only if the button is in the actuated state. | Grey | R412012746 |
| Rotary lock with two keys | The key can be removed in the actuated or non-actuated state. | Grey | R412015479 |

Dimensions in mm

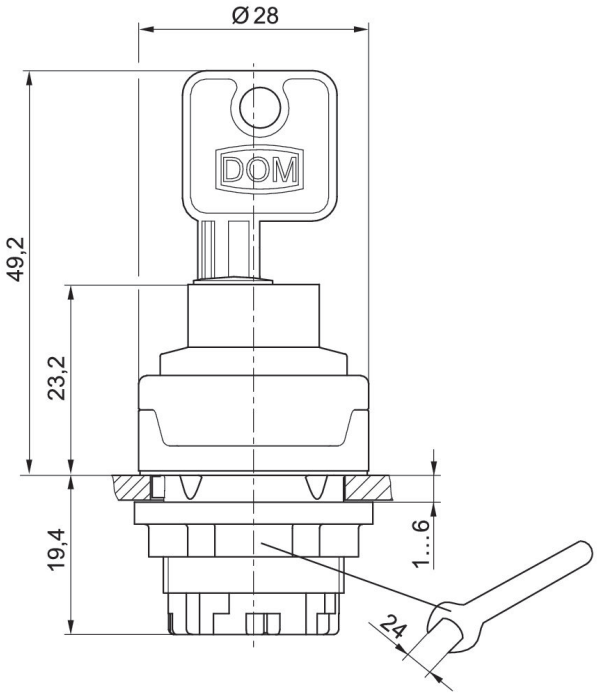

## Actuating controls for AP/ST series control panel valves

Ambient temperature min./max.: -30 °C ... 70 °C



| Type | Color | Part No. |
|---|---|---|
| Push button | Red | R412012734 |

Dimensions in mm

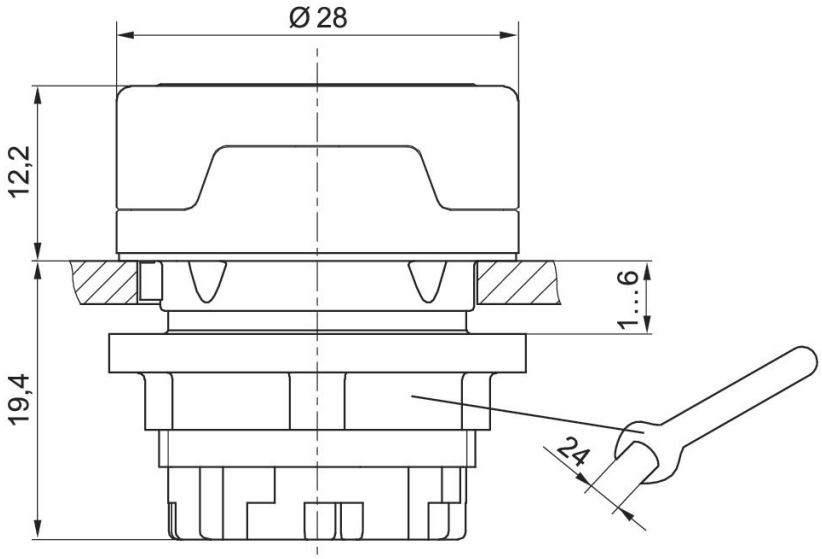

## Actuating controls for AP/ST series control panel valves

Ambient temperature min./max.: -30 °C ... 70 °C



| Type | Color | Part No. |
|---|---|---|
| Push button | Black | R412012735 |

Dimensions in mm

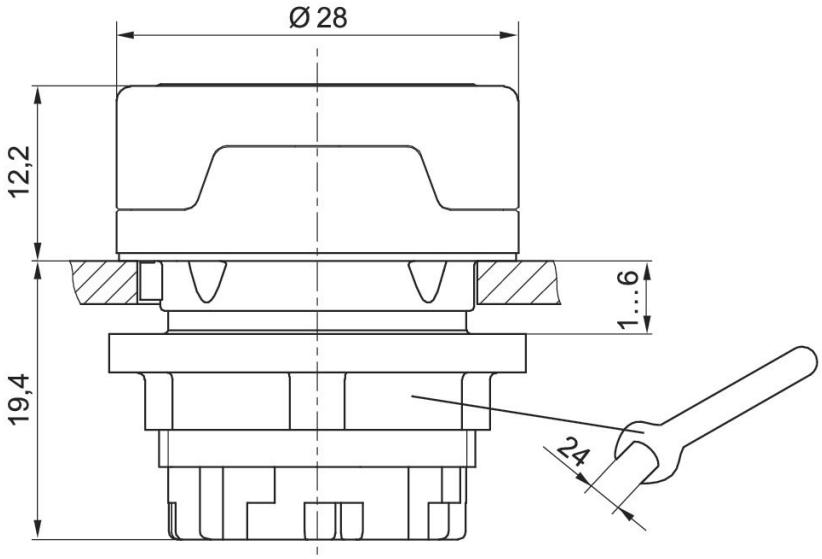

## Actuating controls for AP/ST series control panel valves

Ambient temperature min./max.: -30 °C ... 70 °C



| Type | Color | Part No. |
|---|---|---|
| Push button | Yellow | R412012736 |

Dimensions in mm

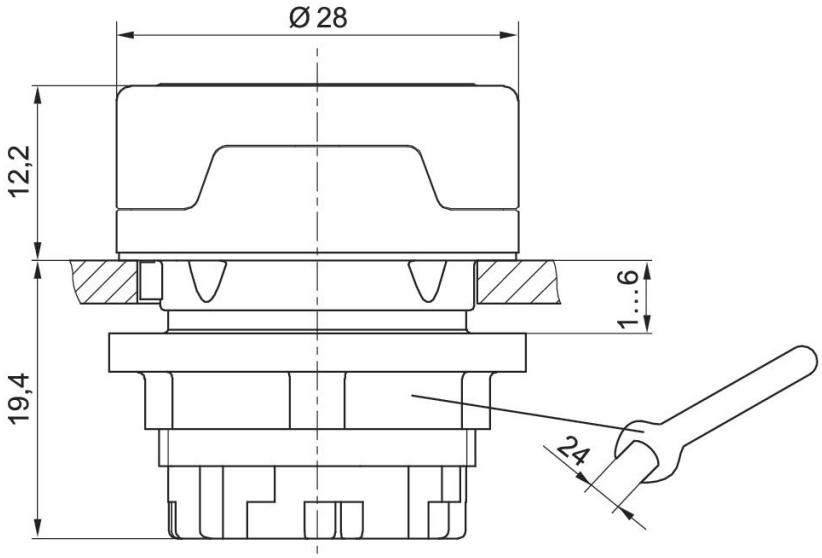

## Actuating controls for AP/ST series control panel valves

Ambient temperature min./max.: -30 °C ... 70 °C



| Type | Color | Part No. |
|---|---|---|
| Push button | Green | R412012737 |

Dimensions in mm

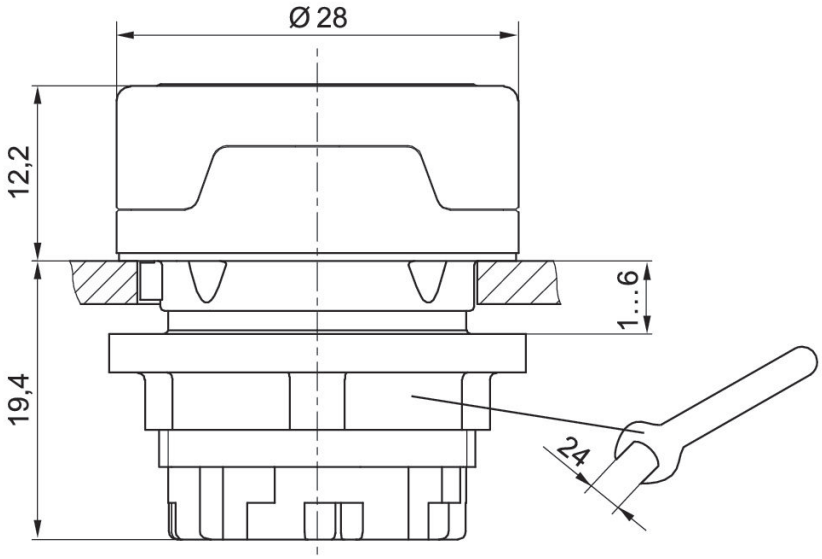

## Actuating controls for AP/ST series control panel valves

Ambient temperature min./max.: -30 °C ... 70 °C



| Type | Color | Part No. |
|---|---|---|
| Push button with detent and rotary release | Black | R412012748 |

Dimensions in mm

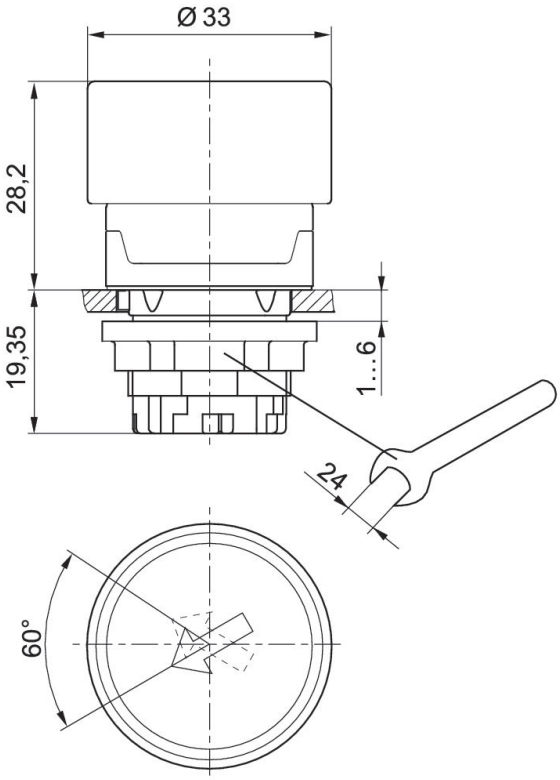

## Actuating controls for AP/ST series control panel valves

Ambient temperature min./max.: -30 °C ... 70 °C



| Type | Color | Part No. |
|---|---|---|
| Lever switch | Red | R412012742 |

Dimensions in mm

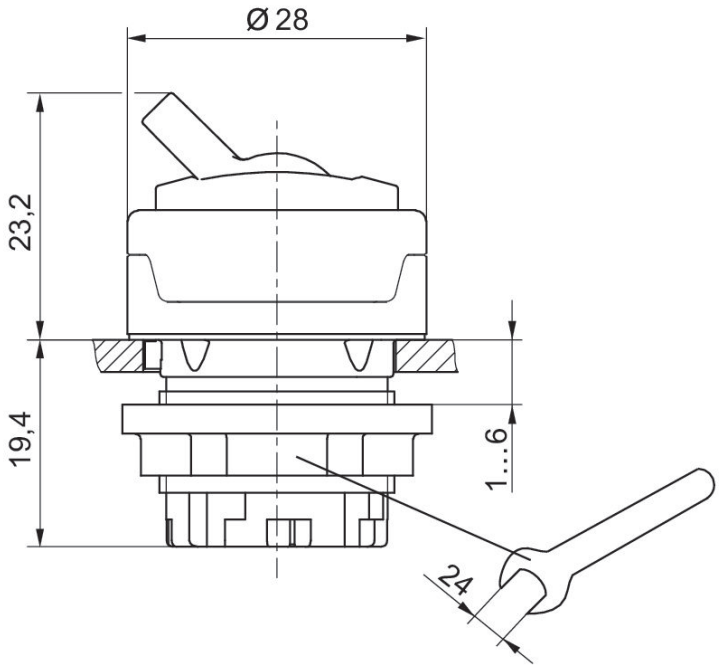

## Actuating controls for AP/ST series control panel valves

Ambient temperature min./max.: -30 °C ... 70 °C



| Type | Color | Part No. |
|---|---|---|
| Lever switch | White | R412012743 |

Dimensions in mm

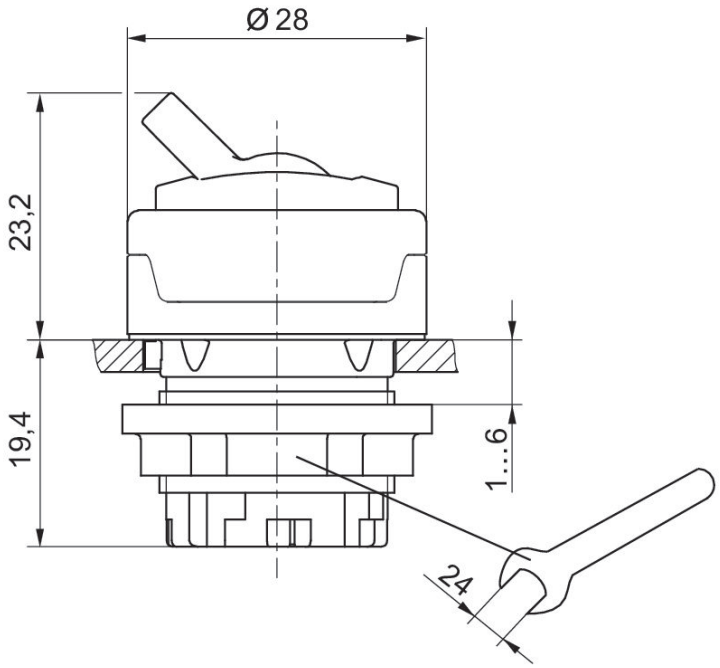

## Actuating controls for AP/ST series control panel valves

Ambient temperature min./max.: -30 °C ... 70 °C



| Type | Color | Part No. |
|---|---|---|
| Mushroom button | Red | R412012738 |

Dimensions in mm

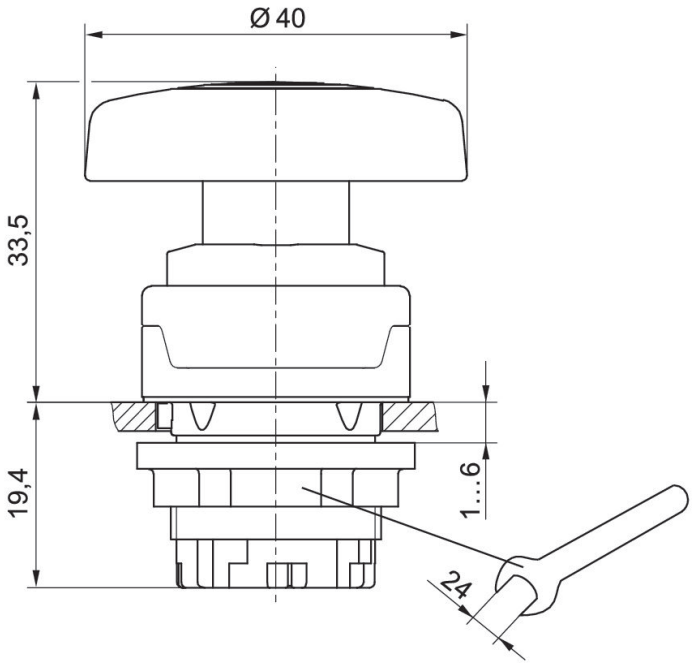

## Actuating controls for AP/ST series control panel valves

Ambient temperature min./max.: -30 °C ... 70 °C



| Type | Color | Part No. |
|---|---|---|
| Mushroom button | Green | R412012739 |

Dimensions in mm

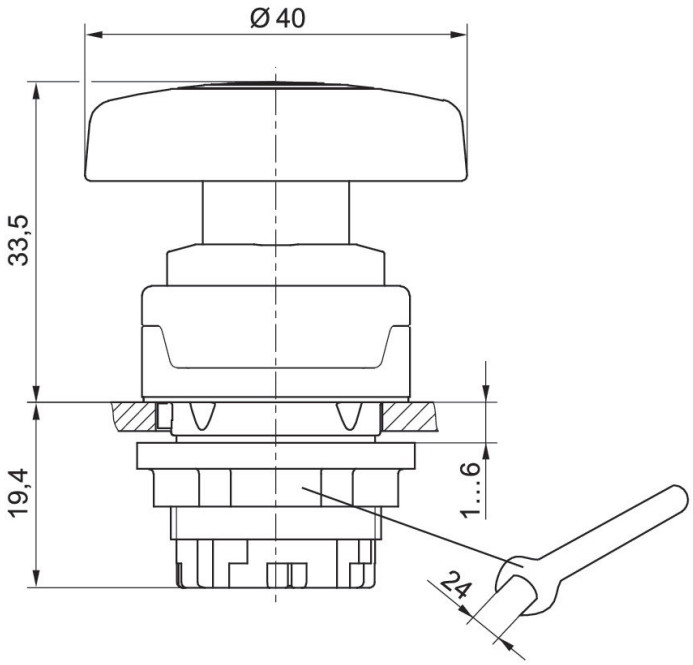

## Actuating controls for AP/ST series control panel valves

Ambient temperature min./max.: -30 °C ... 70 °C



| Type | Color | Part No. |
|---|---|---|
| Mushroom button | Yellow | R412012740 |

Dimensions in mm

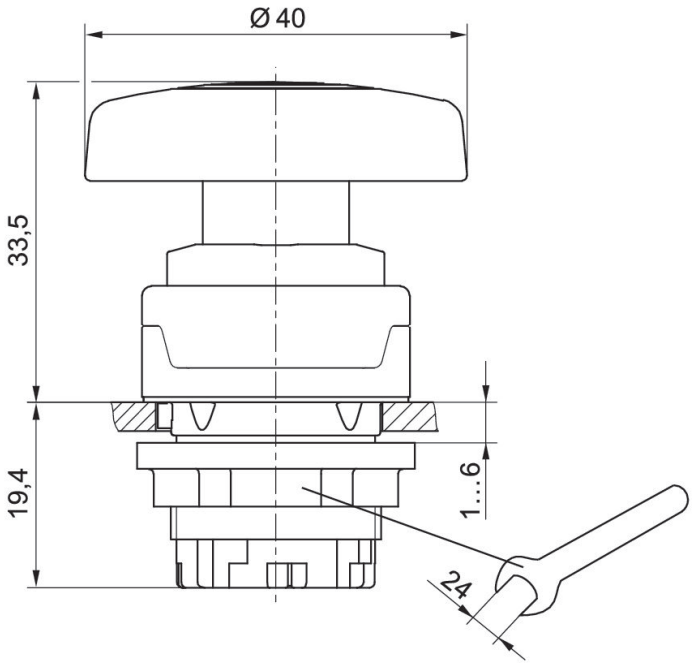

## Actuating controls for AP/ST series control panel valves

Ambient temperature min./max.: -30 °C ... 70 °C



| Type | Note | Color | Part No. |
|---|---|---|---|
| Emergency OFF button, red, with detent and rotary release | Only for ST series spring-return valves (R422002211, R422002213) | Red | R412012741 |

Dimensions in mm

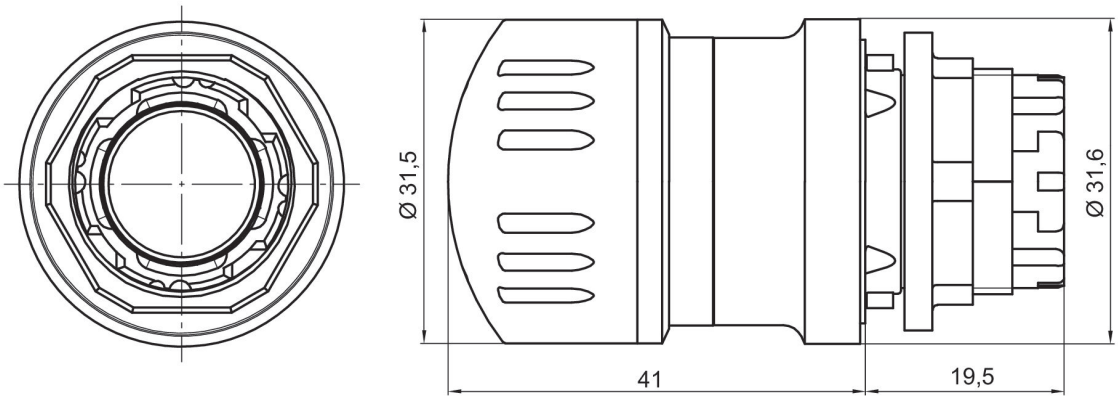

## Accessories for actuating controls for AP/ST series control panel valves

Ambient temperature min./max.: -30 °C ... 70 °C



| Type | Color | Part No. |
|---|---|---|
| Label base | Anthracite | R412012749 |

Dimensions in mm

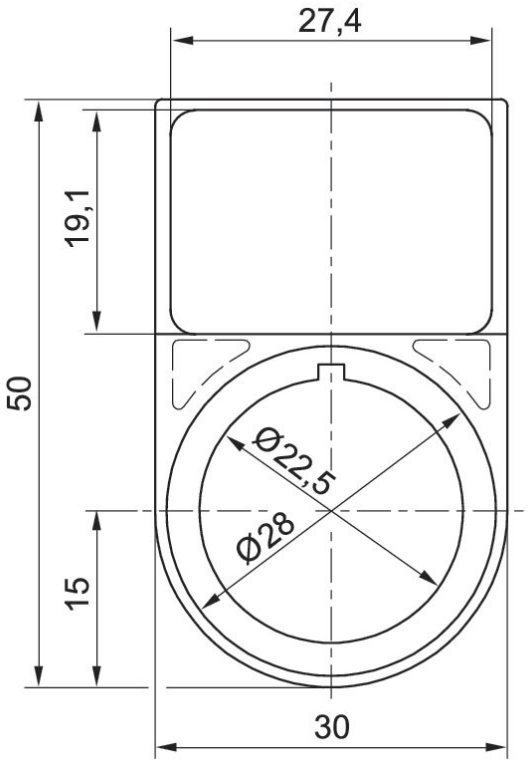

## Accessories for actuating controls for AP/ST series control panel valves

Ambient temperature min./max.: -30 °C ... 70 °C



| Type | Color | Part No. |
|---|---|---|
| Name plates, angular | silver | R412012750 |

Dimensions in mm

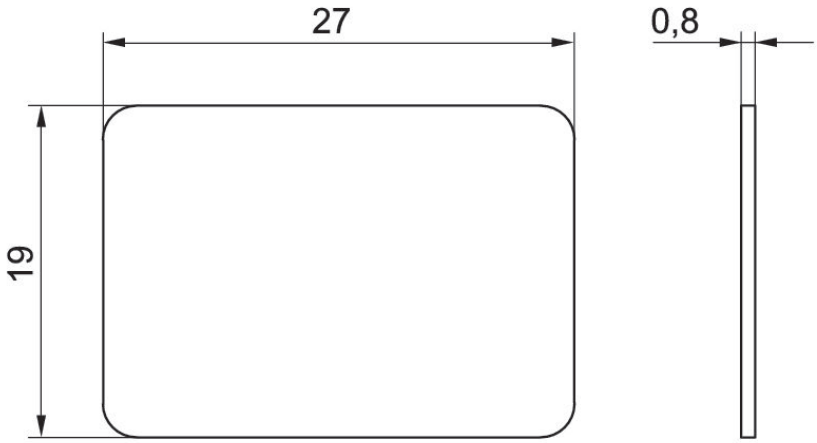

## Accessories for actuating controls for AP/ST series control panel valves

Ambient temperature min./max.: -30 °C ... 70 °C



| Type | Note | Color | Part No. |
|---|---|---|---|
| Emergency OFF sign, round | Only for ST series spring-return valves (R422002211, R422002213) | Yellow | R412012751 |

Dimensions in mm

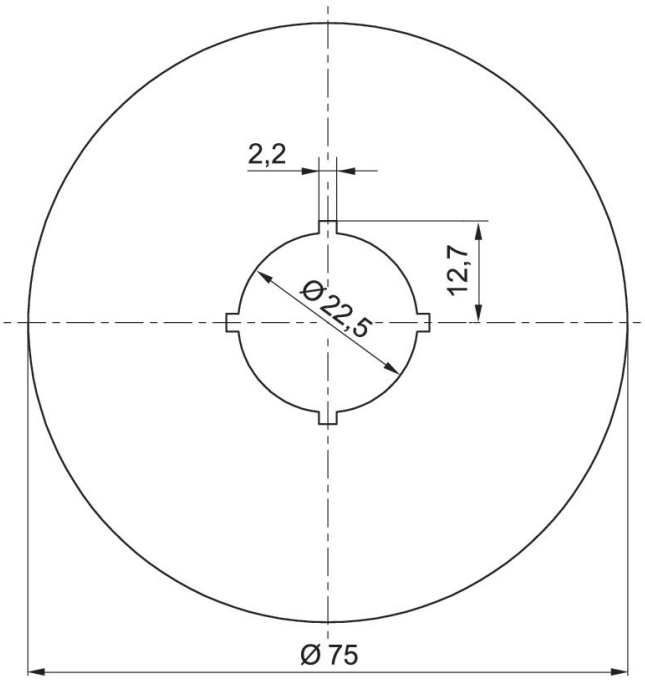

## Accessories for actuating controls for AP/ST series control panel valves

Ambient temperature min./max.: -30 °C ... 70 °C



| Type | Color | Part No. |
|---|---|---|
| Blanking plug | Anthracite | R412012752 |

Dimensions in mm

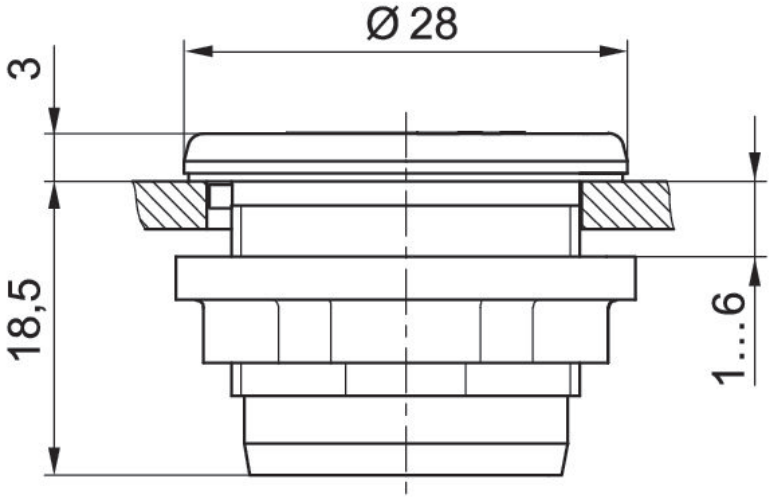

## Accessories for actuating controls for AP/ST series control panel valves

Ambient temperature min./max.: -30 °C ... 70 °C



| Type | Color | Part No. |
|---|---|---|
| Mounting nut M22x1 | Black | R412012753 |

Dimensions in mm

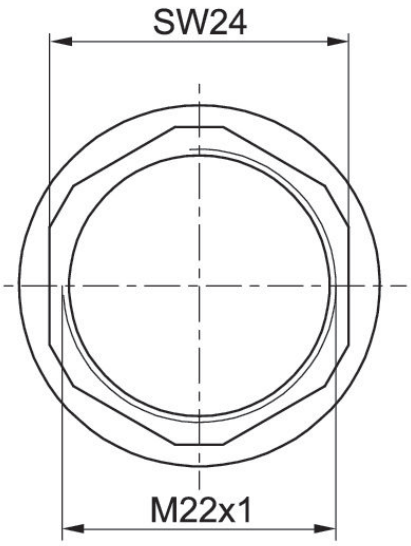


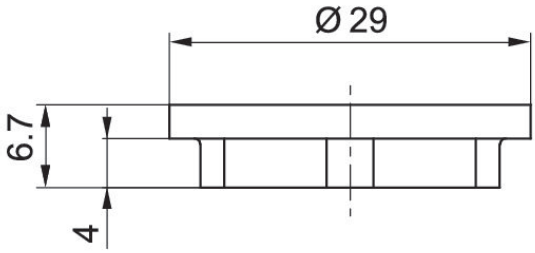

## Accessories for actuating controls for AP/ST series control panel valves

Ambient temperature min./max.: -30 °C ... 70 °C



| Type | Part No. |
|---|---|
| Spare key | R412012989 |

Dimensions in mm

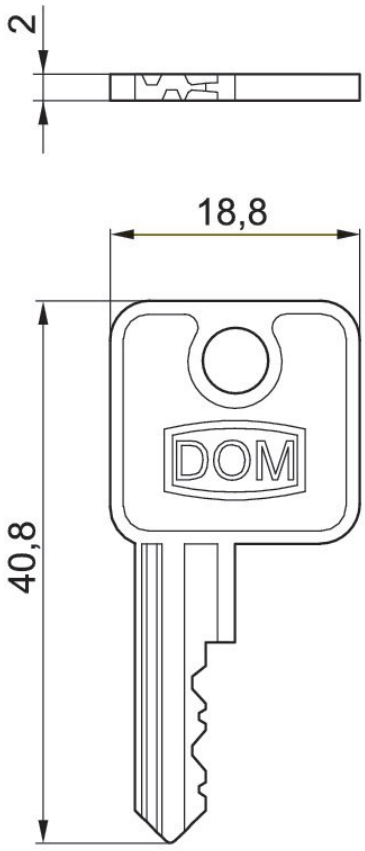

## Accessories for actuating controls for AP/ST series control panel valves

Ambient temperature min./max.: -30 °C ... 70 °C



| Type | Part No. |
|---|---|
| Reduction , Ø30.5 to Ø22.5 | R412015512 |

Dimensions in mm

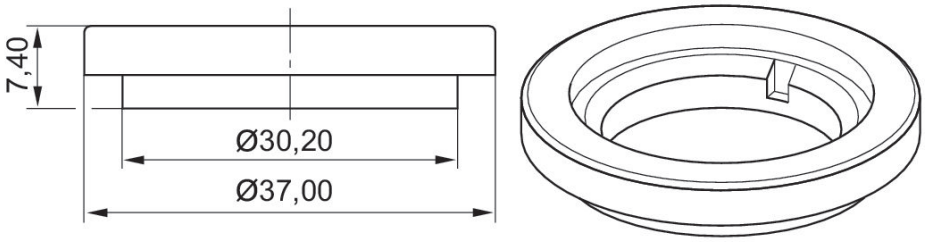


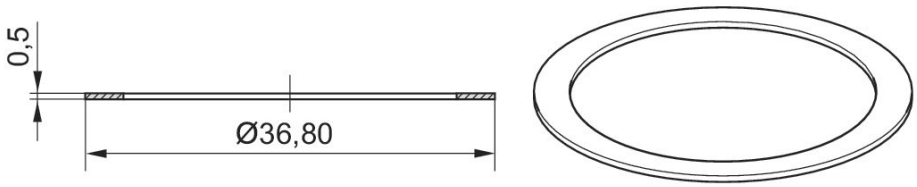


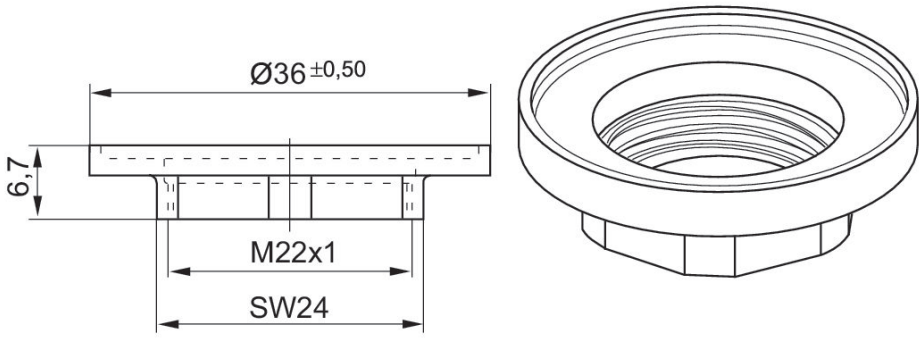

## Accessories for actuating controls for AP/ST series control panel valves

Ambient temperature min./max.: -30 °C ... 70 °C



| Type | Part No. |
|---|---|
| Adapter kit to connect actuating controls to AP/ST series valves | R422002219 |

Dimensions in mm

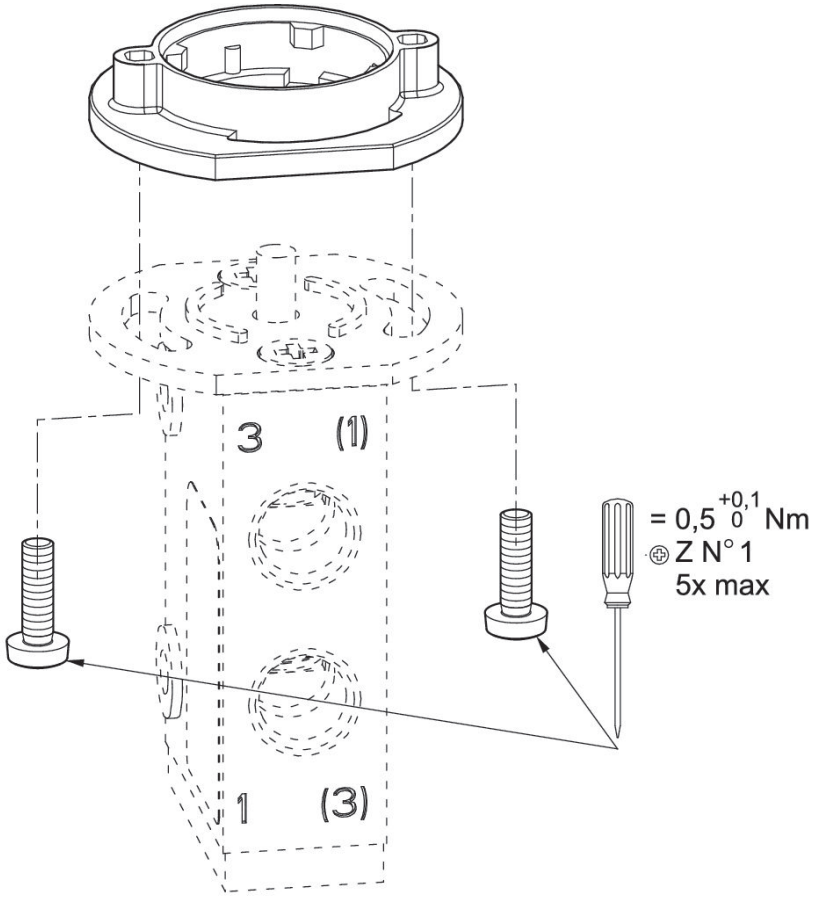


for panel-mounted valves

## Protective cover, Series AP



| Type | Weight [kg] | Material | Part No. |
|---|---|---|---|
| Protective cover for valve foot pedal | 1 | Steel, chrome-plated | 1828104001 |

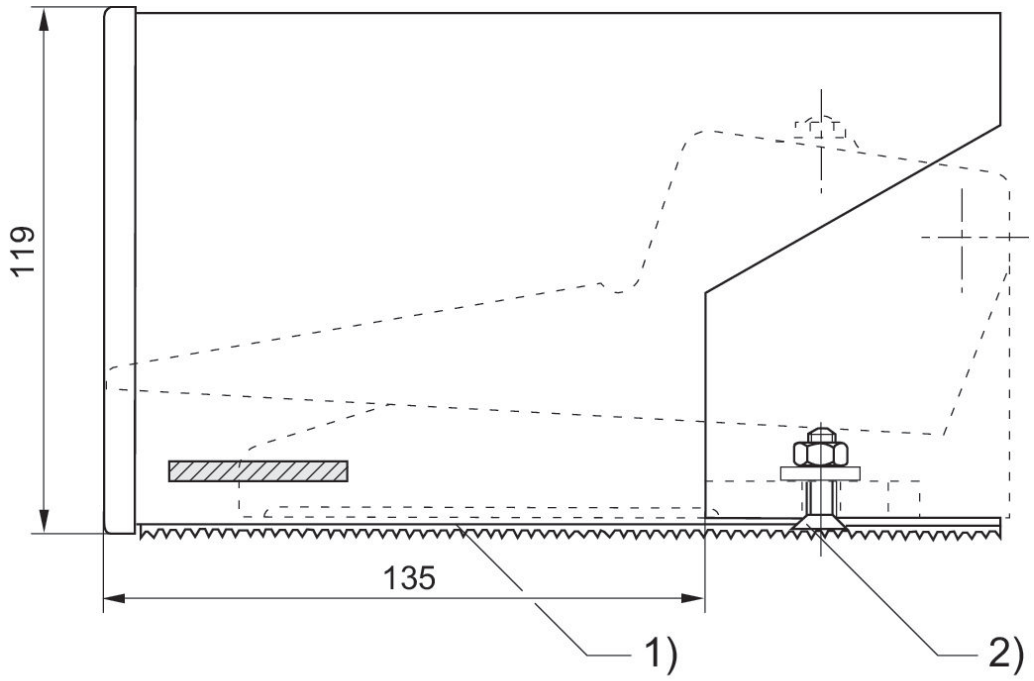


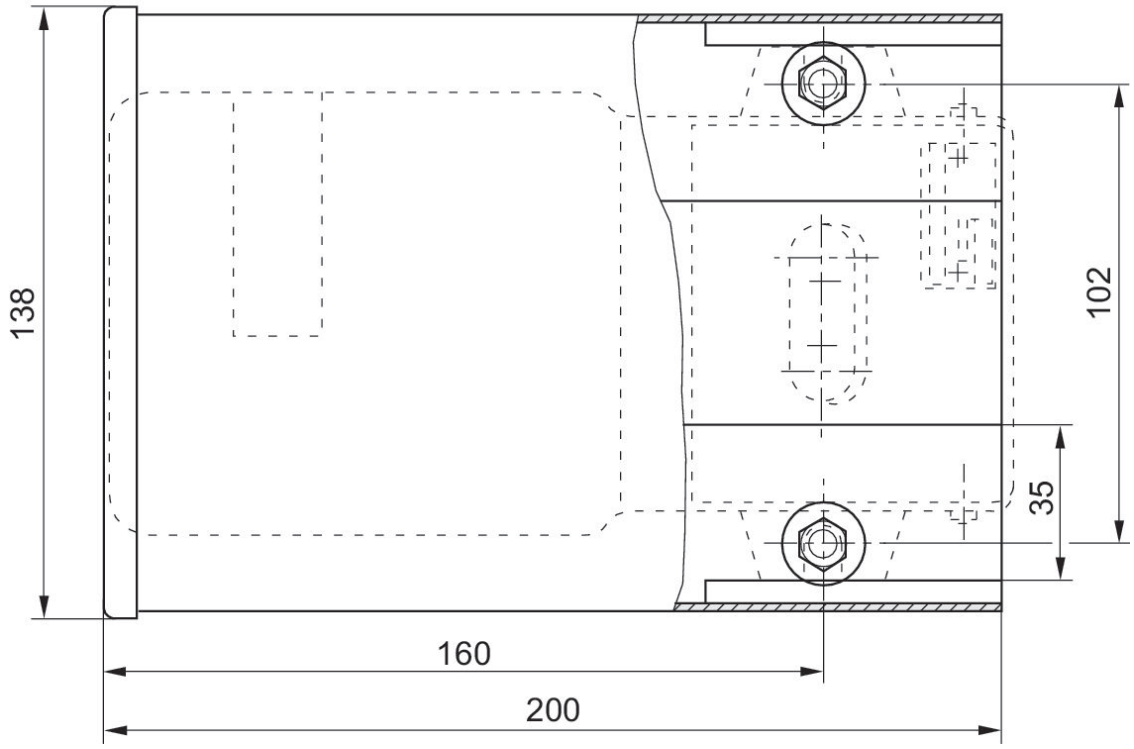


1) Ribbed rubber 2) Countersunk screw with hexagon socket M6 x20

## Protective cover, Series AP



| Type | Weight [kg] | Material | Part No. |
|---|---|---|---|
| Protective cover for valve foot pedal, with detent | 0.35 | Aluminum | 1828104002 |

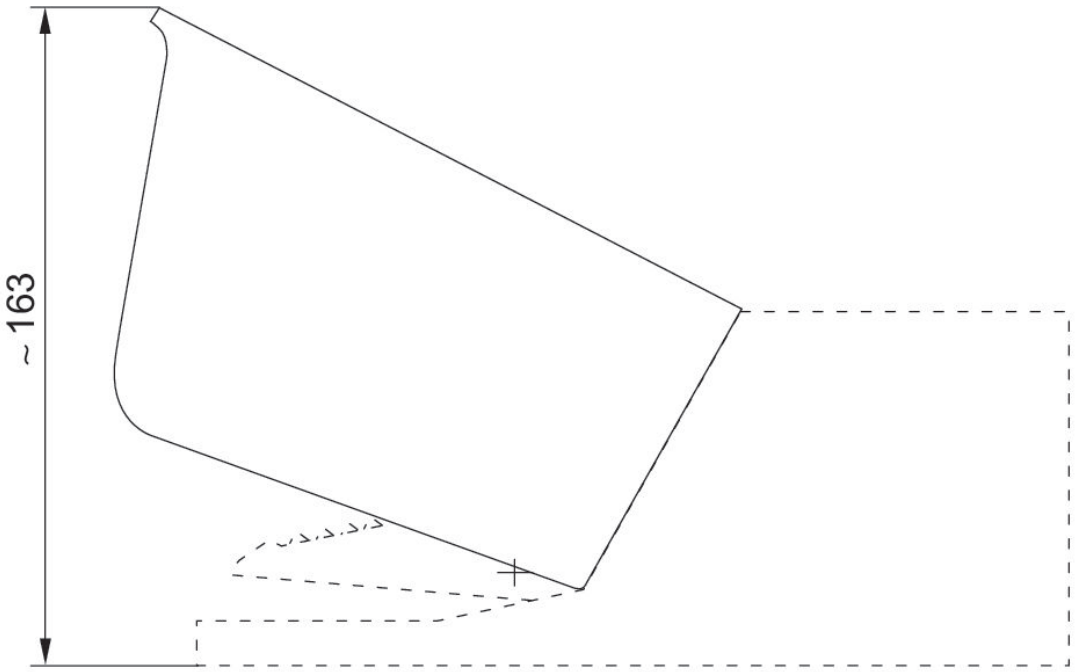
~ 163

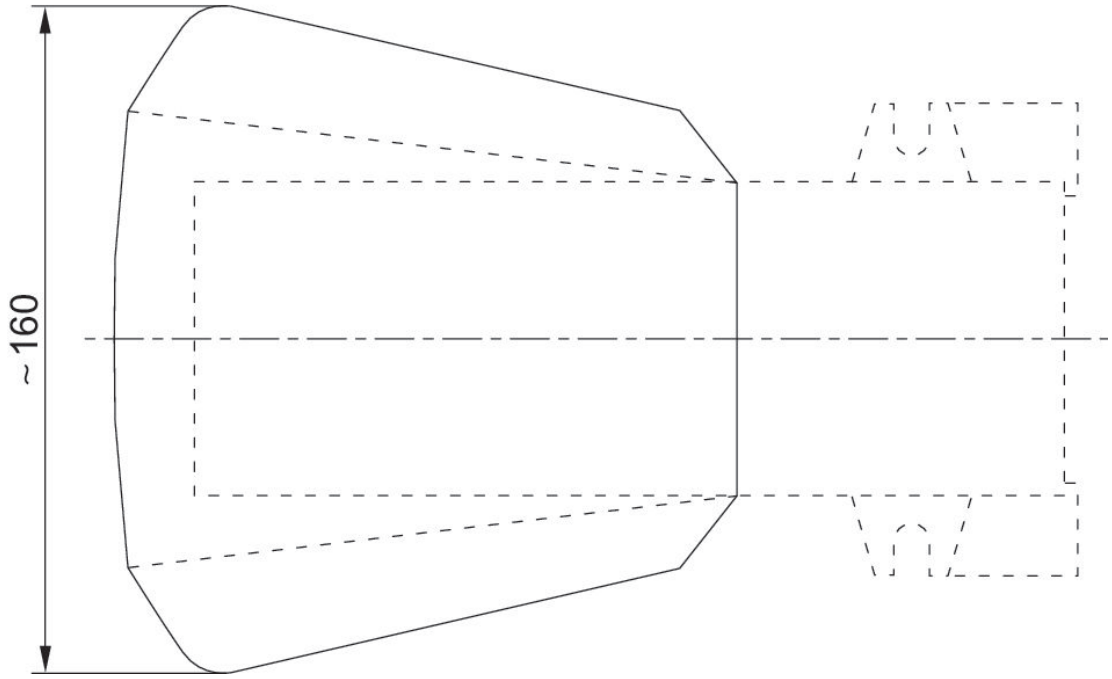
~ 160

## Silencers, series SI1, Sintered bronze

Compressed air connection type: External thread
Silencer material: Sintered bronze
Ambient temperature min./max.: -25 °C ... 80 °C
Working pressure min./max.: 0 bar ... 10 bar





| G | Sound pressure level [dB] | Nominal flow [l/min] | Delivery unit [piece] | Weight [kg] | Part No. |
|---|---|---|---|---|---|
| G 1/8 | 75 | 1623 | 10 | 0.01 | 1827000000 |
| G 1/4 | 79 | 3390 | 10 | 0.02 | 1827000001 |

### 1827000000

Dimensions in mm

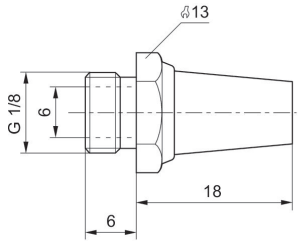


### 1827000001

Dimensions in mm

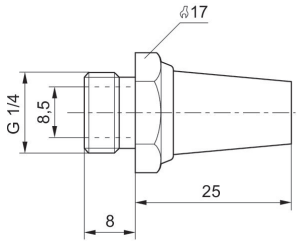


### Flow diagram

#### 1827000000

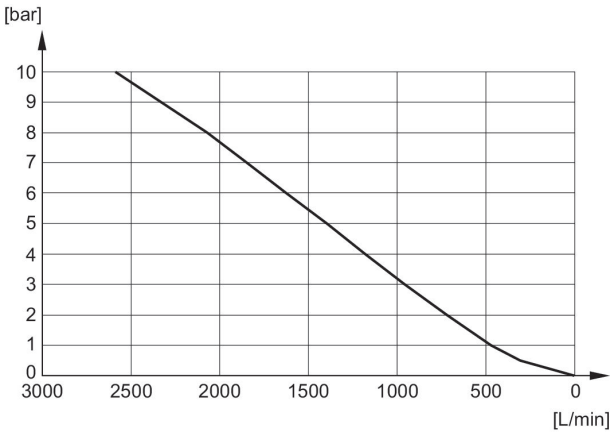


### Flow diagram

#### 1827000001

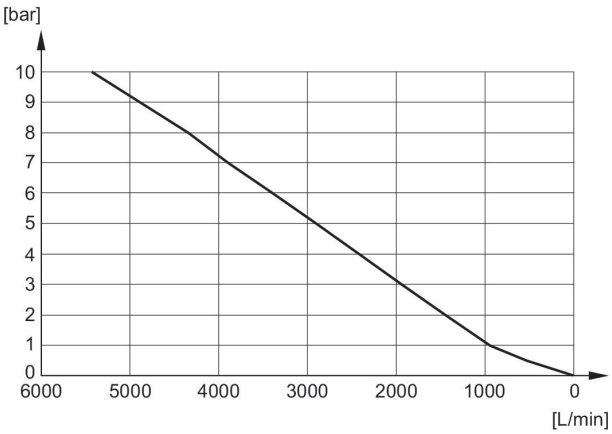

# Efficient pneumatic solutions, our program: cylinders and drives, valves and valve systems, air supply management, proportional pressure control valves








Visit us: **www.Emerson.com/aventics**
Your local contact: **Emerson.com/contactus**

Emerson.com
Facebook.com/EmersonAutomationSolutions
LinkedIn.com/company/Emerson-Automation-Solutions
Twitter.com/EMR_Automation

The Emerson logo is a trademark and service mark of Emerson Electric Co. AVENTICS is a registered trademark of one of the Emerson family of companies. All other trademarks are the property of their respective owners. © 2020 Emerson Electric Co. All rights reserved.

EMERSON.

CONSIDER IT SOLVED®