



CONNECT AND PROTECT

# Accessories

nVent
SCHROFF

# Desk-top cases – Accessories

## CONTENTS

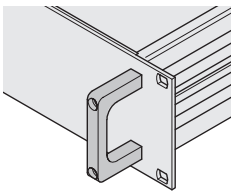





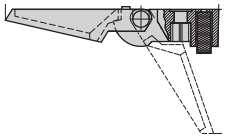



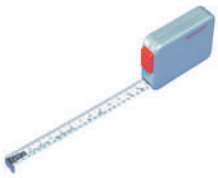



- Front handles see page 5.108
- Strap handles see page 5.110
- Tip-up carrying handles, see page 5.111
- Folding handles see page 5.112
- Tray handle see page 5.113
- Feet, see page 5.113
- Screwdriver (Torx) 5.115
- Measuring tape, see page 5.115


## FRONT HANDLE, ONE-PIECE, WIDTH 7 MM

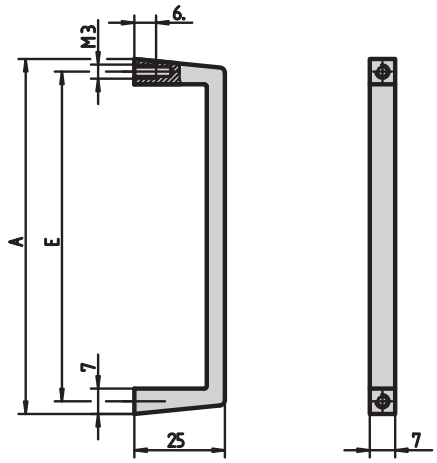


- Static load-carrying capacity 10 kg/pair
- Bolted from rear

### DELIVERY COMPRISES (kit)

| Item | Qty | Description |
|---|---|---|
| 1 | 1 | Front handle, Al extrusion, anodised |

### ORDER INFORMATION

| A mm | E mm | Part no. |
|---|---|---|
| 48 | 40 | **10501-001** |
| 98 | 90 | **10501-002** |

Delivery is exclusively in Standard Pack Quantity (SPQ):
Please order at least 10 pieces or a multiple.
Pricing is per individual item.

## FRONT HANDLE, ONE-PIECE, WIDTH 9 MM

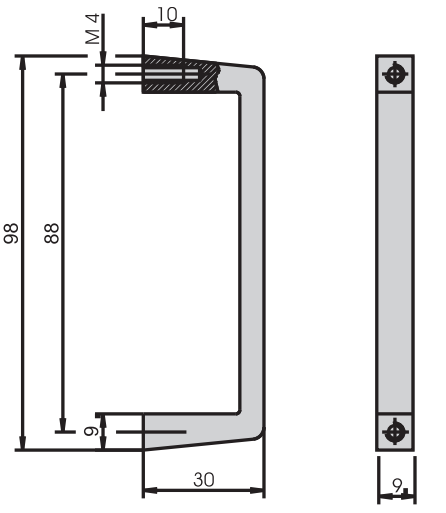


- Static load-carrying capacity 30 kg/pair
- Bolted from rear

### DELIVERY COMPRISES (kit)

| Item | Qty | Description |
|---|---|---|
| 1 | 1 | Front handle, Al extrusion, anodised |

### ORDER INFORMATION

| Description | Part no. |
|---|---|
| Front handle | **10501-003** |
| Pozidrive countersunk screw 14 x 10, zinc-plated, PU 100 pieces | **21101-381** |

Delivery is exclusively in Standard Pack Quantity (SPQ):
Please order at least 10 front handles or a multiple.
Pricing is per individual item.

# Desk-top cases – Accessories

## FRONT HANDLE, ONE-PIECE, WIDTH 10 MM

H = 1 U

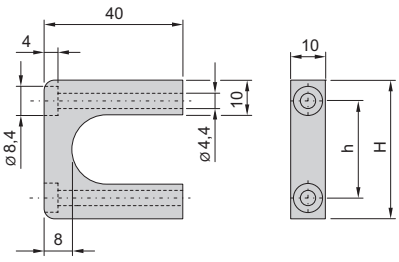


02905050

H ≥ 2 U

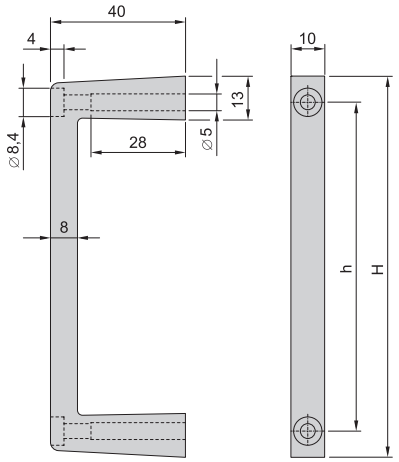


02905051

- Static load-carrying capacity 30 kg/pair
- Bolted from front

### DELIVERY COMPRISES (kit)

| Item | Qty | Description |
|---|---|---|
| 1 | 2 | Front handle, Al extrusion, anodised |
| 2 | 1 | Assembly kit |

### ORDER INFORMATION

| Height H U | Height H mm | Height h mm | Part no. |
|---|---|---|---|
| 1 | 40 | 28 | **20860-256** |
| 2 | 69 | 53 | **20860-257** |
| 3 | 113 | 97.5 | **20860-258** |
| 4 | 157.45 | 141.9 | **20860-259** |
| 5 | 201.9 | 186.4 | **20860-260** |

## FRONT HANDLE, ONE-PIECE, WIDTH 12.2 MM

1 U

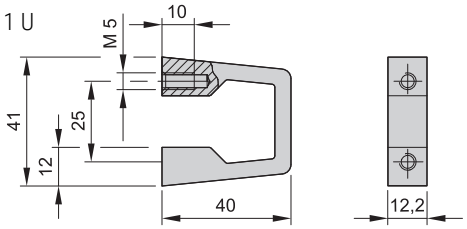


BZA42316

2 U ... 6 U

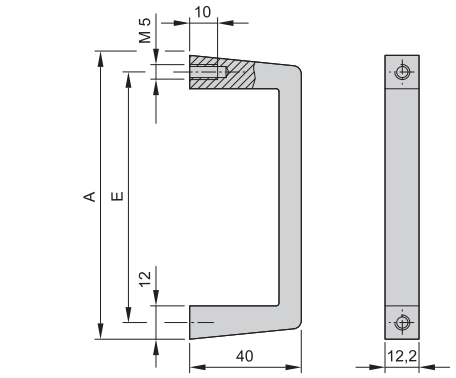


BZA42327

Straight version

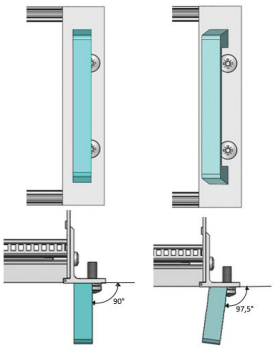


Angled Version

- Static load-carrying capacity 30 kg/pair
- Bolted from rear
- Angled version for easy access to screws

### DELIVERY COMPRISES

| Item | Qty | Description |
|---|---|---|
| 1 | 1 | Front handle, Al extrusion, anodised |

### ORDER INFORMATION

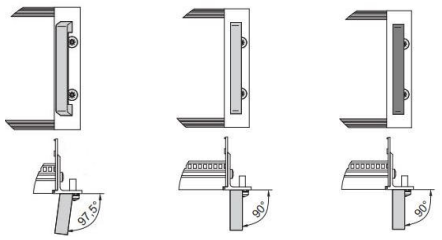


| U | A mm | E mm | clear anodised Angled Ver Part No. | Straight version Part No. | black anodised Straight version Part No. |
|---|---|---|---|---|---|
| **1** | 41 | 25 | – | **10501-116** | – |
| | 57.5 | 44.5 | – | **10501-016** | – |
| **2** | 69 | 55 | – | **10501-004** | **10501-025** |
| **3** | 102 | 88 | **10501-020** | **10501-005** | **10501-026** |
| **4** | 132 | 120 | – | **10501-006** | **10501-027** |
| | 146.4 | 133.4 | **10501-021** | **10501-018** | – |
| **5** | 194 | 180 | – | **10501-007** | **10501-028** |
| **6/9** | 249 | 235 | **10501-022** | **10501-008** | **10501-029** |

**Accessories**

| | |
|---|---|
| Panhead pozidrive screw self-locking, M5 x 12, zinc-plated, PU 100 pieces | **21100-788** |
| Torx countersunk screw M5 x 12, zinc-plated, 100 pieces | **24560-183** |

Delivery is exclusively in Standard Pack Quantity (SPQ):
Please order at least 10 front handles or a multiple. Pricing is per individual item.

**NOTE:** Please order panhead screws separately

**Part number in bold face type: ready for despatch within 2 working days**
Part number in normal type: ready for despatch within 10 working days

# Desk-top cases – Accessories

## STRAP HANDLE, WIDTH 25 MM



05895003

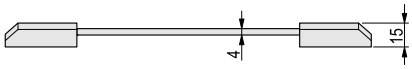


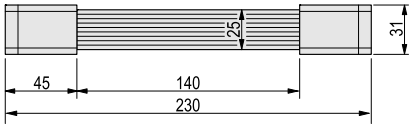


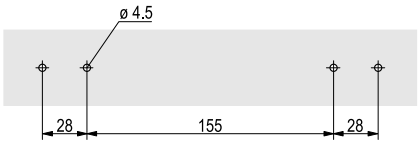


02902050

- Static load-carrying capacity 20 kg

### DELIVERY COMPRISES (kit)

| Item | Qty | Description |
|---|---|---|
| 1 | 1 | Band, spring steel, handle, flexible plastic, grey, RAL 7016 |
| 2 | 2 | Cover, grey, RAL 7016 |
| 3 | 1 | Assembly kit |

### ORDER INFORMATION

| Length mm | Part no. |
|---|---|
| 230 | **20850-249** |

## STRAP HANDLE, WIDTH 22 MM



02992006

- Static load-carrying capacity 20 kg

### DELIVERY COMPRISES (kit)

| Item | Qty | Description |
|---|---|---|
| 1 | 1 | Band, spring steel, plastic-coated, black |
| 2 | 2 | Cover cap, St, chrome-plated |
| 3 | 1 | Assembly kit |

### ORDER INFORMATION

| Length mm | Part no. |
|---|---|
| 170 | **10504-002** |
| 240 | **10504-003** |

Length 240 mm/170 mm

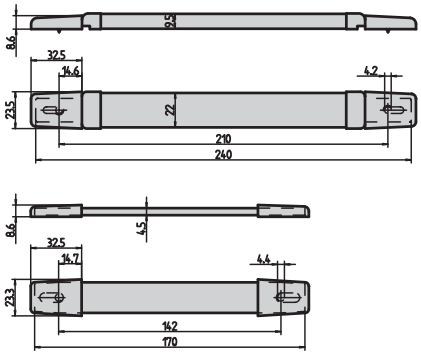


BZA42368

## TIP-UP CARRYING HANDLE IN SEPARATE PARTS



02992002 02992001

- Static load-carrying capacity 25 kg (with handle bars of 450 mm length)

## LATERAL HANDLE PARTS



02992002

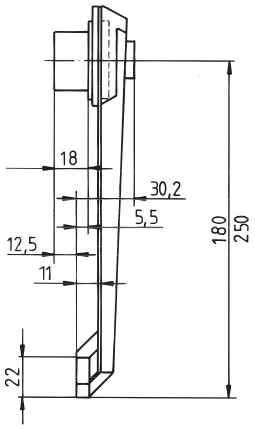


A4-2361

- Handle can be adjusted in 30° grid by pressing button

### DELIVERY COMPRISES (kit)

| Item | Qty | Description |
|---|---|---|
| 1 | 2 | Lateral parts, die-cast zinc, painted (chrome decor) |
| 2 | 2 | Safety inserts, St, 1.5 mm, black |
| 3 | 2 | Adaptor/locking brackets |
| 4 | 1 | Assembly kit |

### ORDER INFORMATION

| Length mm | Part no. |
|---|---|
| 180 | **10502-297** |
| 250 | **10502-296** |

## HANDLE BAR



02992001

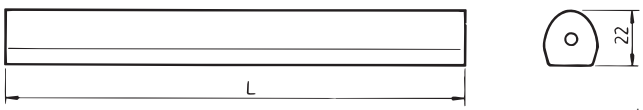


A4-2367

### DELIVERY COMPRISES (kit)

| Item | Qty | Description |
|---|---|---|
| 1 | 1 | Handle bar, Al, black anodised |

### ORDER INFORMATION

| Length mm | Part no. |
|---|---|
| 1000 | **30502-191** |

**Part number in bold face type: ready for despatch within 2 working days**
Part number in normal type: ready for despatch within 10 working days

## FOLDING METAL HANDLE



02992004

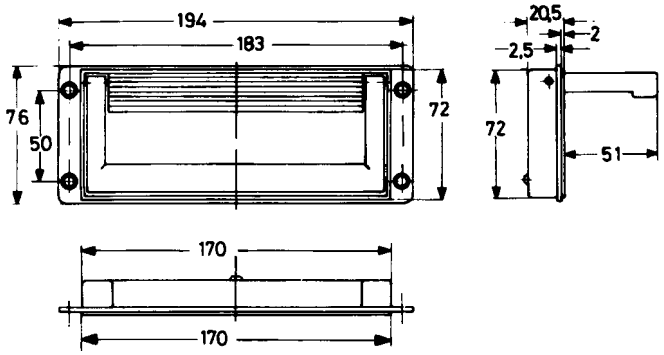


A4-2369

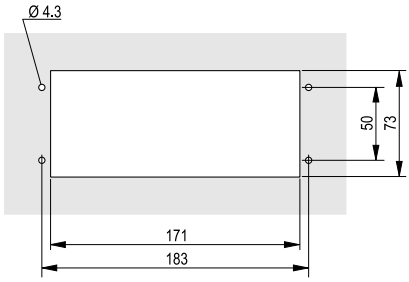


A4-2370

- Static load-carrying capacity 30 kg/pair
- For case ingress protection to IP 40
- Locks in folded and opened positions
- Equal cut-out for fitting in front of or behind case wall

### DELIVERY COMPRISES (kit)

| Item | Qty | Description |
|---|---|---|
| 1 | 1 | Handle, Al die-cast, RAL 9005, black |
| 2 | 1 | Handle shell, Al die-cast, RAL 9006, silver |

### ORDER INFORMATION

| Description | Part no. |
|---|---|
| Folding metal handle | **20505-032** |

Delivery is exclusively in Standard Pack Quantity (SPQ): Please order at least 10 pieces or a multiple. Pricing is per individual item.

## FOLDING PLASTIC HANDLE



02992005

Folding plastic handle

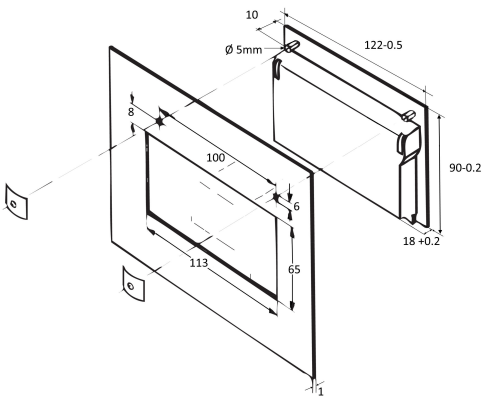


114064711

- Static load-carrying capacity 20 kg/pair
- For case ingress protection to IP 40
- Locks in folded and opened positions
- External mounting only

### DELIVERY COMPRISES (kit)

| Item | Qty | Description |
|---|---|---|
| 1 | 1 | Handle, PA, light grey |
| 2 | 1 | Handle shell, PA, dark grey |
| 3 | 1 | Assembly kit |

### ORDER INFORMATION

| Description | Part no. |
|---|---|
| Folding plastic handle | **10505-014** |

Delivery is exclusively in Standard Pack Quantity (SPQ):
Please order at least 10 pieces or a multiple. Pricing is per individual item.

## TRAY HANDLE

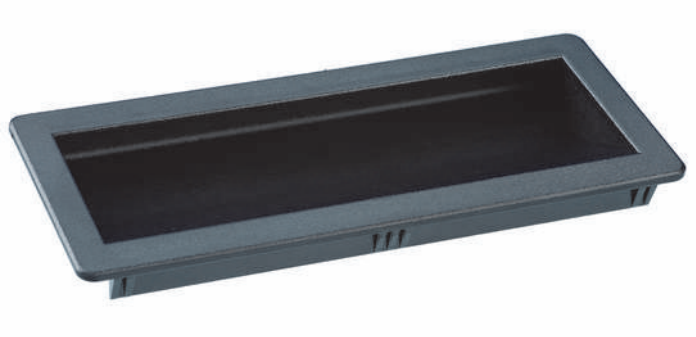

- Static load-carrying capacity 30 kg/pair

### DELIVERY COMPRISES

| Item | Qty | Description |
|---|---|---|
| 1 | 1 | Handle shell, black ABS, UL 94 V-0 |
| 2 | 2 / 3 | Spring clip Size 1 / 2 |

### ORDER INFORMATION

| Description | Part No. |
|---|---|
| Size 1 for material thickness 1.5 mm | **60229-004** |
| Size 2 for material thickness 1.5 mm | **60225-012** |

Delivery is exclusively in Standard Pack Quantity (SPQ):
Please order a minimum of 10 tray handles or a multiple.
Pricing is per individual item.

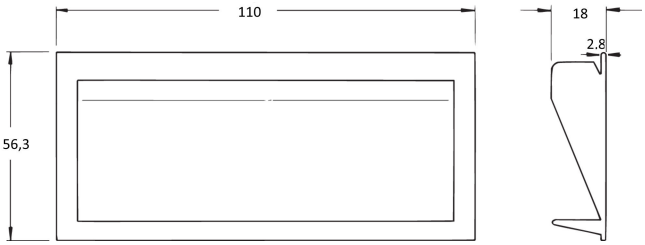


Size 1, case cut-out 49 × 104 mm

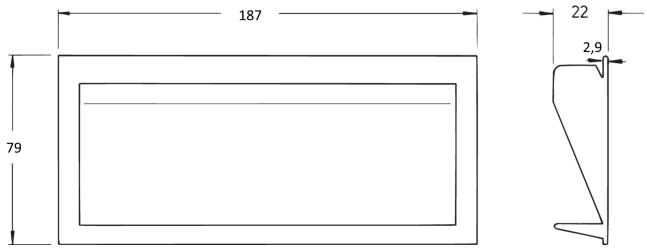


Size 2, case cut-out 73 × 171 mm

## PLASTIC FOOT

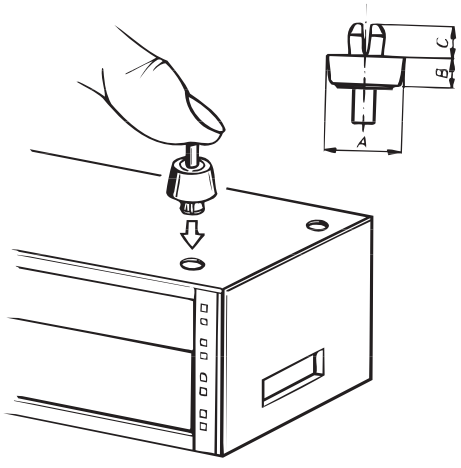


A4-330

### DELIVERY COMPRISES

| Pos. | Menge | Beschreibung |
|---|---|---|
| 1 | 1 | Plastic foot, PC, UL 94 V-0, black |

### ORDER INFORMATION

| Description | Dimensions A mm | B mm | C mm | Hole diameter mm | Part no. |
|---|---|---|---|---|---|
| For material thickness 1 ... 3 | 16 | 7.2 | 4 | 7 | **60224-009** |
| For material thickness 1.5 ... 3 | 21 | 15 | 7 | 7.7 | **60224-011** |

Delivery is exclusively in Standard Pack Quantity (SPQ):
Please order at least 50 pieces or a multiple. Pricing is per individual item.

### NOTE

- Foot is inserted into mounting hole and then fixed by pressing in the expanding pin

**Part number in bold face type: ready for despatch within 2 working days**
Part number in normal type: ready for despatch within 10 working days

# Desk-top cases – Accessories

## PLASTIC TIP-UP FOOT

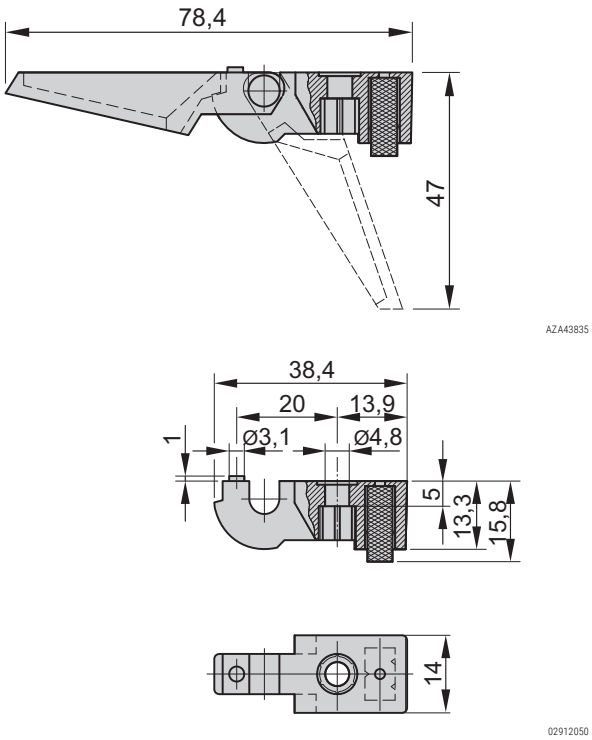


- Static load-carrying capacity 25 kg per foot
- Can be used instead of standard feet
- Fixing holes provided in bottom of case

### ORDER INFORMATION

| Description | Qty/PU | grey<br>Part no. | black<br>Part no. |
|---|---|---|---|
| Foot with tip-up, PA, UL 94 HB | 1 | **10603-023** | **10603-025** |
| Foot without tip-up, PA, UL 94 HB | 1 | **10603-024** | **10603-026** |
| Pozidrive flathead screw M4 × 10, St, zinc-plated, PU 100 pieces | | | **21100-513** |
| Hexagon nut M4, St, zinc-plated, PU 100 pieces | | | **21100-211** |
| Spring washer A4, St, zinc-plated, PU 100 pieces | | | **21100-207** |

Delivery is exclusively in Standard Pack Quantity (SPQ):
Please order a minimum of 10 feet or a multiple.
Pricing is per individual item.

### NOTE

- Please order assembly kit separately.

## PLASTIC TIP-UP FEET

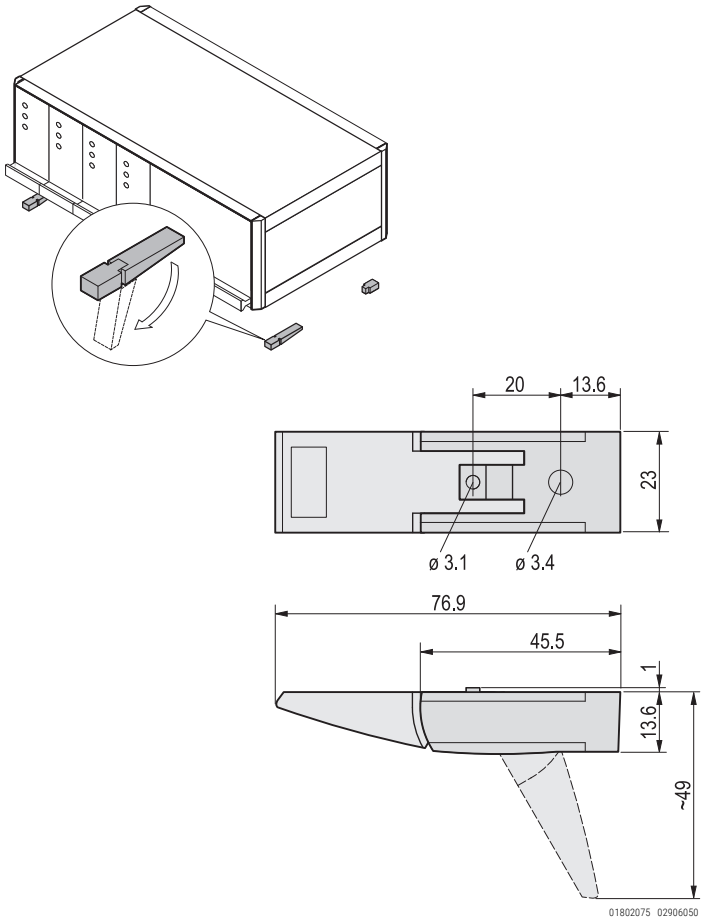


- Static load-carrying capacity 25 kg per foot
- Can be used instead of standard feet
- Fixing holes provided in bottom of case

### DELIVERY COMPRISES (kit)

| Item | Qty | Description |
|---|---|---|
| 1 | 4 | Foot, PA, UL 94 V-0 |
| 2 | 4 | Anti-slip protection, TPE |
| 3 | 2 | Tip-up device, PA, UL 94 V-0 |
| 4 | 1 | Assembly kit |

### ORDER INFORMATION

| Description | RAL 7016 anthra-cite<br>Part no. | RAL 9006 silver<br>Part no. |
|---|---|---|
| Plastic tip-up foot | **20603-002** | **20603-001** |

## AL DIE-CAST TIP-UP FOOT

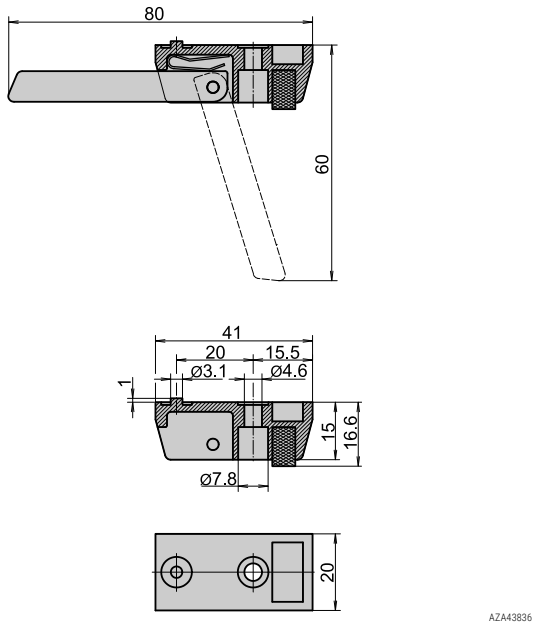


AZA43836

- Static load-carrying capacity 50 kg per foot
- Can be used instead of standard feet
- Fixing holes provided in bottom of case

### ORDER INFORMATION

| Description | Qty | Part no. |
|---|---|---|
| Foot without tip-up, Al die-cast, silver | 1 piece (SPQ 10)[1)] | **10603-001** |
| Foot with tip-up, Al die-cast, silver | 1 piece (SPQ 10)[1)] | **10603-002** |
| **Accessories** | | |
| Cheesehead screw with slot M4 x 12, St, zinc-plated, PU 100 pieces | | **21101-211** |
| Hexagon nut M4, St, zinc-plated, PU 100 pieces | | **21100-211** |
| Spring washer A4, St, zinc-plated, PU 100 pieces | | **21100-207** |

1) Delivery is exclusively in Standard Pack Quantity (SPQ):
Please order at least 10 pieces or a multiple. Pricing is per individual item.

## SCREWDRIVER

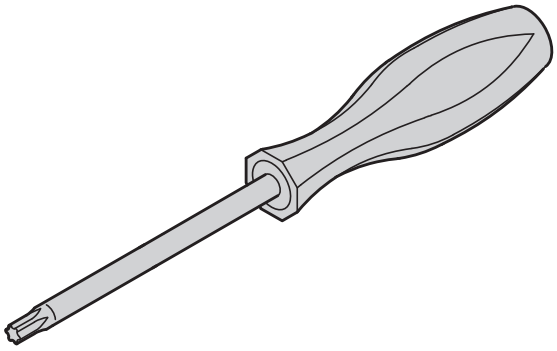

AZA45925

- T8: For mounting guide rails to horizontal rails
- T10: To fix the top cover locking
- T20: For mounting horizontal rails and rear hoods to side panels, cover plates, support brackets and front handles

### ORDER INFORMATION

| Torx screwdriver | | Qty/PU pieces | Part no. |
|---|---|---|---|
| M2.5 | T 8 Torx | 1 | **64560-026** |
| M3 | T 10 Torx | 1 | **64560-230** |
| M4 | T 20 Torx | 1 | **64560-027** |

## MEASURING TAPE



32506001

- Measuring tape with cm, U-, HP-division (lenght 2 m)
- Plastic cases, metal measuring tape with automatic collection

### ORDER INFORMATION

| Description | Qty/PU | Part no. |
|---|---|---|
| Measuring tape | 1 | **89009-001** |

**Part number in bold face type: ready for despatch within 2 working days**
Part number in normal type: ready for despatch within 10 working days

## North America

**Warwick, RI, USA**
Tel +1.800.525.4682
**San Diego, CA, USA**
Tel +1.800.854.7086

## Europe, Middle East & India

**Straubenhardt, Germany**
Tel +49 7082 794 0
**Betschdorf, France**
Tel +33 3 88 90 64 90
**Warsaw, Poland**
Tel +48 22 209 98 35
**Hemel Hempstead,**
**Great Britain**
Tel +44 1442 24 04 71
**Lainate, Italy**
Tel +39 02 932 714 1
**Dubai, United Arab Emirates**
Tel +971 4 37 81 700
**Bangalore, India**
Tel +91 80 67152000
**Istanbul, Turkey**
Tel +90 216 250 7374

## Asia Pacific

**Shanghai, China**
Tel +86 21 2412 6943
**Singapore**
Tel +65 6768 5800
**Shin-Yokohama, Japan**
Tel +81 45 476 0271


Our powerful portfolio of brands:

**CADDY ERICO HOFFMAN RAYCHEM SCHROFF TRACER**

nVent

nVent.com/SCHROFF


©2018 nVent. All nVent marks and logos are owned or licensed by nVent Services GmbH or its affiliates. All other trademarks are the property of their respective owners.
nVent reserves the right to change specifications without notice.