Compact Multiprotocol I/O Module for Ethernet
16 Universal Digital Channels, Configurable as PNP Inputs or 2 A Outputs
TBEN-L5-16DXP

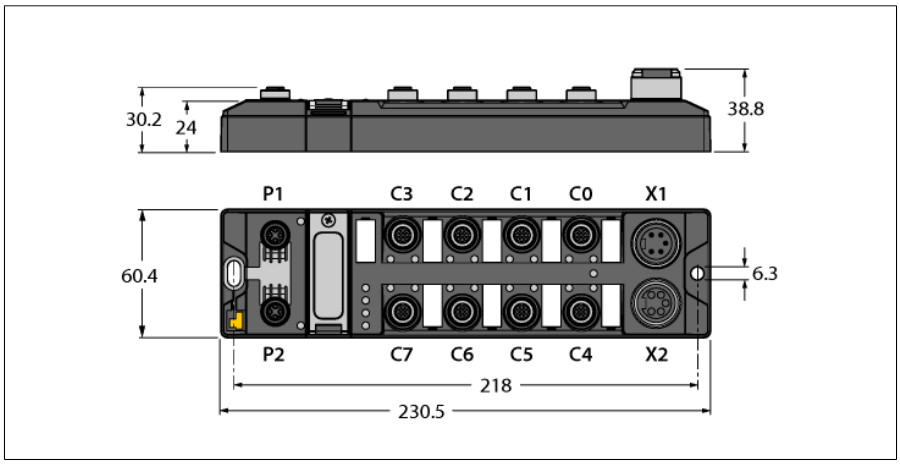

- **PROFINET device, EtherNet/IP device or Modbus TCP slave**
- **Integrated Ethernet switch**
- **Supports 10 Mbps / 100 Mbps**
- **2x M12, 4-pin, D-coded, Ethernet field-bus connection**
- **Glass fiber reinforced housing**
- **Shock and vibration tested**
- **Fully potted module electronics**
- **Protection classes IP65, IP67, IP69K**
- **7/8", 5-pin connectors for power supply**
- **Galvanically isolated voltage groups**
- **Input diagnostics per port**
- **Max. 2 A per output**
- **Output diagnostics per channel**
- **Two freely selectable digital channels per port**
- **FLC/ARGEE programmable**

Type designation	TBEN-L5-16DXP
Ident no.	6814088
Supply	
Supply voltage	24 VDC
Admissible range	18…30 VDC Total current max. 9 A per voltage group Total current V1 + V2 max. 11 A
Voltage supply connection	5-pin male 7/8" connector X1
Sensor/Actuator supply V_{AUX1}	supply of ports C0-C3 from V1 short-circuit proof, 120 mA per port
Sensor/Actuator supply V_{AUX2}	supply of ports C4-C7 from V2 short-circuit proof, 120 mA per port
Electrical isolation	galvanic isolation of the voltage groups V1 and V2, voltages up to 500 VAC
System data	
Fieldbus transmission rate	10 Mbps/100 Mbps
Fieldbus connection technology	2 × M12, 4-pin, reverse-keyed
Protocol detection	automatic
Web server	Default: 192.168.1.254
Service interface	Ethernet via P1 or P2
Field Logic Controller (FLC)	
ARGEE Firmware Version	3.2.9.0
ARGEE Engineering Version	2.0.24.0
Modbus TCP	
Addressing	Static IP, DHCP
Supported function codes	FC1, FC2, FC3, FC4, FC5, FC6, FC15, FC16, FC23
Number of TCP connections	8
Input register start address	0 (0x0000 hex)
Output register start address	2048 (0x0800 hex)
Ethernet/IP	
Addressing	acc. to EtherNet/IP specification
Quick Connect (QC)	< 150 ms
Device Level Ring (DLR)	supported
Class 3 connections (TCP)	3
Class 1 connections (CIP)	10
Input Assembly Instance	101
Output Assembly Instance	102
Configuration Assembly Instance	106

Edition • 2021-04-09T09:35:16+02:00

Compact Multiprotocol I/O Module for Ethernet
16 Universal Digital Channels, Configurable as PNP Inputs or 2 A Outputs
TBEN-L5-16DXP

PROFINET	
Version	2.35
Addressing	DCP
Conformance class	B (RT)
MinCycleTime	1 ms
Fast Start-Up (FSU)	< 150 ms
Diagnostics	acc. to PROFINET alarm handling
Topology detection	supported
Automatic addressing	supported
Media Redundancy Protocol (MRP)	supported
Netload class	3

Digital inputs	
Number of channels	16
Connectivity inputs	M12, 5-pin
Input type	PNP
Type of input diagnostics	Group diagnostics
Switching threshold	EN 61131-2 Typ 3, PNP
Low level signal voltage	< 5 V
High level signal voltage	> 11 V
Low level signal current	< 1.5 mA
High level signal current	> 2 mA
Input delay	2.5 ms
Electrical isolation	Galvanically isolated to the fieldbus Voltage proof up 500 VDC

Digital outputs	
Number of channels	16
Connectivity outputs	M12, 5-pol
Output type	PNP
Type of output diagnostics	Channel diagnostics
Output voltage	24 VDC from potential group
Output current per channel	2.0 A, short-circuit proof, max. 2.0 A per port
Output delay	1.3 ms
Load type	EN 60947-5-1: DC-13
Short-circuit protection	yes
Electrical isolation	Galvanically isolated to the fieldbus Voltage proof up 500 VDC

Standard/Directive conformity	
Vibration test	acceleration to 20 g acc. to EN 60068-2-6
Shock test	acc. to EN 60068-2-27
Drop and topple	acc. to EN 60068-2-31/IEC 60068-2-32
Electromagnetic compatibility	acc. to EN 61131-2
Approvals and certificates	CE, FCC, FM Class I, Zone 2, UV-resistant in accordance with DIN EN ISO 4892-2A (2013)
UL Certificate	cULus LISTED 21 W2, Encl.type 1 IND.CONT.EQ.

General Information	
Dimensions (W x L x H)	60.4 x 230.4 x 39mm
Operating temperature	-40…+70 °C
Storage temperature	-40 °C … +85 °C
Altitude	max. 5000 m
Protection class	IP65 IP67 IP69K
MTTF	148 years acc. to SN 29500 (Ed. 99) 20 °C
Housing material	PA6-GF30
Housing color	Black
Window material	Lexan
Material screw	303 stainless steel
Material label	Polycarbonate
Halogen-free	yes
Mounting	2 mounting holes Ø 6.3 mm

Edition • 2021-04-09T09:35:16+02:00

Compact Multiprotocol I/O Module for Ethernet
16 Universal Digital Channels, Configurable as PNP Inputs or 2 A Outputs
TBEN-L5-16DXP

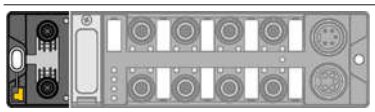	**Note** Ethernet cable (example): RSSD-RSSD-4416-2M Ident. no. 6441652	M12 x 1 Ethernet 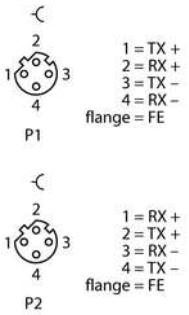
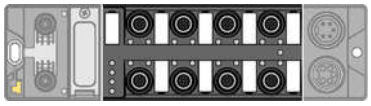	**Note** Actuator and sensor cable/PUR connection cable (example): RKC4.4T-2-RSC4.4T/TXL Ident-no. 6625608 Connection cable with Y piece for single assignment VBRS4.4-2RKC4T-1/1/TEL Ident. no. 6628199	M12 x 1 I/O Port 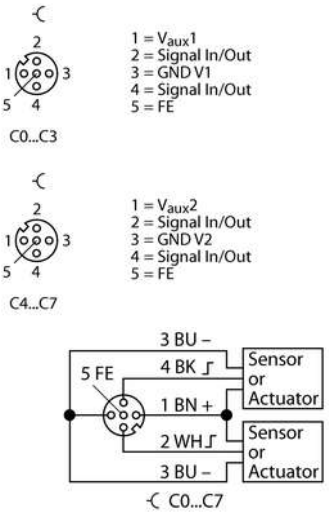
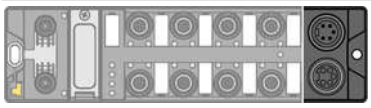	**Note** Power supply cable (example): RKM52-1-RSM52 ID number 6914149	7/8" Power Supply 

Edition • 2021-04-09T09:35:16+02:00

Module Status LED

LED	Color	Status	Description
ETH1 / ETH2	Green	On	Ethernet Link (100 Mbps)
		Flashing	Ethernet communication (100 Mbps)
	yellow	On	Ethernet link (10 Mbps)
		Flashing	Ethernet communication (10 Mbps)
		Off	No Ethernet link
BUS	Green	On	Active connection to a master
		Flashing	Steady flashing: Ready Sequence of 3 flashes in 2 seconds: FLC/ARGEE active
	Red	On	IP-address conflict or Restore Mode or Modbus timeout
		Flashing	Blink/Wink command active
	Green/Red	Alternating	Autonegotiation and/or waiting for DHCP/Boot-P addressing
		Off	Power off
ERR	Green	On	Diagnostics disabled
	Red	On	Diagnostics enabled V_2 undervoltage diagnosis is parameter-dependent
	LED response master in the Beep network:		
	Green	1 Hz, 250 ms off	Cyclical IO data exchange
	Red/Green	1 Hz, 250 ms red	Cyclical IO data exchange, diagnostics available
	Green/Red	1 Hz, alternating	Discovery mode active
	Red		Discovery mode active, diagnostics available
PWR	LED response parameter (PWR) at V_2 Undervoltage = "red"		
	Green	ON	V_1 and V_2 power on
	Red	ON	V_2 power off or below defined tolerance of 18 V
		OFF	V_1 power off or below defined tolerance of 18 V
	LED response parameter (PWR) at V_2 Undervoltage = "green"		
	Green	ON	V_1 and V_2 power on
		Flashing	V_2 power off or below defined tolerance of 18 V
		OFF	V_1 power off or below defined tolerance of 18 V

LED Status I/O

LED	Color	Status	Description
LED 0 … 15	Green	ON	Input or output active
	Red	ON	Output active with overload/short circuit
		flashing	Power overload at the corresponding port. Both port LEDs are flashing.
		OFF	Input or output inactive

Edition • 2021-04-09T09:35:16+02:00

Compact Multiprotocol I/O Module for Ethernet
16 Universal Digital Channels, Configurable as PNP Inputs or 2 A Outputs
TBEN-L5-16DXP

Process Data Mapping of the Single Protocols

For more details on the corresponding protocols see manual.

Modbus TCP Register Mapping

	Reg	Bit 15	Bit 14	Bit 13	Bit 12	Bit 11	Bit 10	Bit 9	Bit 8	Bit 7	Bit 6	Bit 5	Bit 4	Bit 3	Bit 2	Bit 1	Bit 0
Inputs (RO)	0x0000	DI15 C7P2	DI14 C7P4	DI13 C6P2	DI12 C6P4	DI11 C5P2	DI10 C5P4	DI9 C4P2	DI8 C4P4	DI7 C3P2	DI6 C3P4	DI5 C2P2	DI4 C2P4	DI3 C1P2	DI2 C1P4	DI1 C0P2	DI0 C0P4
Status (RO)	0x0001	-	FCE	-	-	CFG	COM	V1	-	V2	-	-	-	-	-	-	Diag Warn
Diag (RO)	0x0002	-	-	-	-	-	-	-	-	-	-	-	-	-	-	-	I/O Diag
Outputs (RW)	0x0800	DO15 C7P2	DO14 C7P4	DO13 C6P2	DO12 C6P4	DO11 C5P2	DO10 C5P4	DO9 C4P2	DO8 C4P4	DO7 C3P2	DO6 C3P4	DO5 C2P2	DO4 C2P4	DO3 C1P2	DO2 C1P4	DO1 C0P2	DO0 C0P4
I/O Diag (RO)	0xA000	SCO7	SCO6	SCO5	SCO4	SCO3	SCO2	SCO1	SCO0	SCS7	SCS6	SCS5	SCS4	SCS3	SCS2	SCS1	SCS0
I/O Diag (RO)	0xA001	-	-	-	-	-	-	-	-	SCO15	SCO14	SCO13	SCO12	SCO11	SCO10	SCO9	SCO8

EtherNet/IP™ data mapping with activated scheduled diagnostics, default settings

	Word	Bit 15	Bit 14	Bit 13	Bit 12	Bit 11	Bit 10	Bit 9	Bit 8	Bit 7	Bit 6	Bit 5	Bit 4	Bit 3	Bit 2	Bit 1	Bit 0
Input data (station -> scanner)																	
GW status	0	-	FCE	-	-	CFG	COM	V1	-	V2	-	-	-	-	-	-	Diag Warn
Inputs	1	DI15 C7P2	DI14 C7P4	DI13 C6P2	DI12 C6P4	DI11 C5P2	DI10 C5P4	DI9 C4P2	DI8 C4P4	DI7 C3P2	DI6 C3P4	DI5 C2P2	DI4 C2P4	DI3 C1P2	DI2 C1P4	DI1 C0P2	DI0 C0P4
Diag 1	2	-	-	Sched Diag	-	-	-	-	-	-	-	-	-	-	-	-	I/O Diag
Diag 2	3	SCO7	SCO6	SCO5	SCO4	SCO3	SCO2	SCO1	SCO0	SCS7	SCS6	SCS5	SCS4	SCS3	SCS2	SCS1	SCS0
Diag 3	4	-	-	-	-	-	-	-	-	SCO15	SCO14	SCO13	SCO12	SCO11	SCO10	SCO9	SCO8
Output data (scanner -> station)																	
Control	0	reserved															
Outputs	1	DO15 C7P2	DO14 C7P4	DO13 C6P2	DO12 C6P4	DO11 C5P2	DO10 C5P4	DO9 C4P2	DO8 C4P4	DO7 C3P2	DO6 C3P4	DO5 C2P2	DO4 C2P4	DO3 C1P2	DO2 C1P4	DO1 C0P2	DO0 C0P4

EtherNet/IP™ data mapping with activated summarized diagnostics

	Word	Bit 15	Bit 14	Bit 13	Bit 12	Bit 11	Bit 10	Bit 9	Bit 8	Bit 7	Bit 6	Bit 5	Bit 4	Bit 3	Bit 2	Bit 1	Bit 0
Input data (station -> scanner)																	
GW status	0	-	FCE	-	-	CFG	COM	V1	-	V2	-	-	-	-	-	-	Diag Warn
Inputs	1	DI15 C7P2	DI14 C7P4	DI13 C6P2	DI12 C6P4	DI11 C5P2	DI10 C5P4	DI9 C4P2	DI8 C4P4	DI7 C3P2	DI6 C3P4	DI5 C2P2	DI4 C2P4	DI3 C1P2	DI2 C1P4	DI1 C0P2	DI0 C0P4
Diag 1	2	-															I/O Diag
Output data (scanner -> station)																	
Control	0	reserved															
Outputs	1	DO15 C7P2	DO14 C7P4	DO13 C6P2	DO12 C6P4	DO11 C5P2	DO10 C5P4	DO9 C4P2	DO8 C4P4	DO7 C3P2	DO6 C3P4	DO5 C2P2	DO4 C2P4	DO3 C1P2	DO2 C1P4	DO1 C0P2	DO0 C0P4

PROFINET Process Data

	Byte	Bit 7	Bit 6	Bit 5	Bit 4	Bit 3	Bit 2	Bit 1	Bit 0
Inputs	0	DI7 C3P2	DI6 C3P4	DI5 C2P2	DI4 C2P4	DI3 C1P2	DI2 C1P4	DI1 C0P2	DI0 C0P4
	1	DI15 C7P2	DI14 C7P4	DI13 C6P2	DI12 C6P4	DI11 C5P2	DI10 C5P4	DI9 C4P2	DI8 C4P4
Outputs	0	DO7 C3P2	DO6 C3P4	DO5 C2P2	DO4 C2P4	DO3 C1P2	DO2 C1P4	DO1 C0P2	DO0 C0P4
	1	DO15 C7P2	DO14 C7P4	DO13 C6P2	DO12 C6P4	DO11 C5P2	DO10 C5P4	DO9 C4P2	DO8 C4P4

Key:

DIx	Digital input channel x	CFG	I/O Configuration error
DOx	Digital output channel x	FCE	I/O-ASSISTANT Force Mode active
Cx	Port x	I/ODiag	I/O diagnostics connected
Px	Pin x	SchedDiag	Manufacturer-specific diagnostics configured and active
DiagWarn	Diagnostic at least on 1 channel	SCSx	Short-circuit at port x
V1	Undervoltage V1	SCG1	Short-circuit supply ports C0-C3

V2	Undervoltage V2	SCG2	Short-circuit supply ports C4-C7
COM	Communication error on internal module bus	SCOx	Short-circuit output channel x

Edition • 2021-04-09T09:35:16+02:00