Quick Start Guide

Operation

Press any of the switches to operate.

The Transmitter will auto sleep between operations to save power.

RF Transmit GREEN LED operates when Taurus is transmitting an RF signal.

RF Acknowledge (if configured):

GREEN LED will Flash at high speed to indicate that an acknowledgment **has** successfully been received back form the receiver.

RED LED will Flash at high speed to indicate that an acknowledgment **has not** been received back form the receiver.

Low Battery: If battery requires recharging Low Battery LED illuminates for 3 seconds after each operation.



Recharging the Battery

Recharge with either USB Cable or QI Wireless Charger

uUSB Type C



Wireless Recharging





When Charging the Battery RED LED gives a slow Flash indicates charging is in progress.

When fully charged the GREEN LED is illuminated

Note: If the Battery becomes very depleted it can take a few minutes before there is adequate charge to start the RED LED to flash!

Configuring Modes of Operation

To configure the modes of operation, unscrew the six enclosure fixing screws to access the internal circuit board.

The SET switch is used to configure the operating modes.

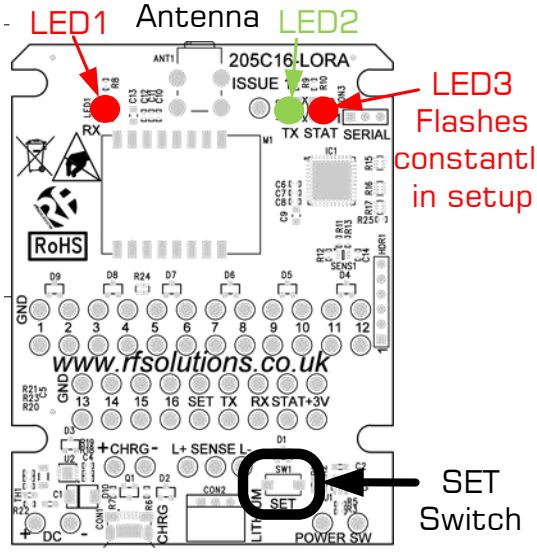

The Following Modes can be configured using the SET Switch

1. **RF Mode** of Transmission (FM or LORA Mode)
2. **Acknowledgement** back from the Receiver
3. Automatic **Watchdog** Transmissions
4. **Continuous** or **State Change** Transmission

TAURUS Transmitters are factory Shipped with the following Settings

RF Transmission	FM
Acknowledgment	OFF
Watchdog	OFF
Transmission Type	Continuous

Restoring TAURUS to Factory Default

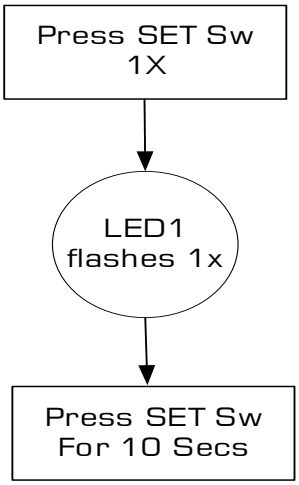

To Set the RF Transmission MODE

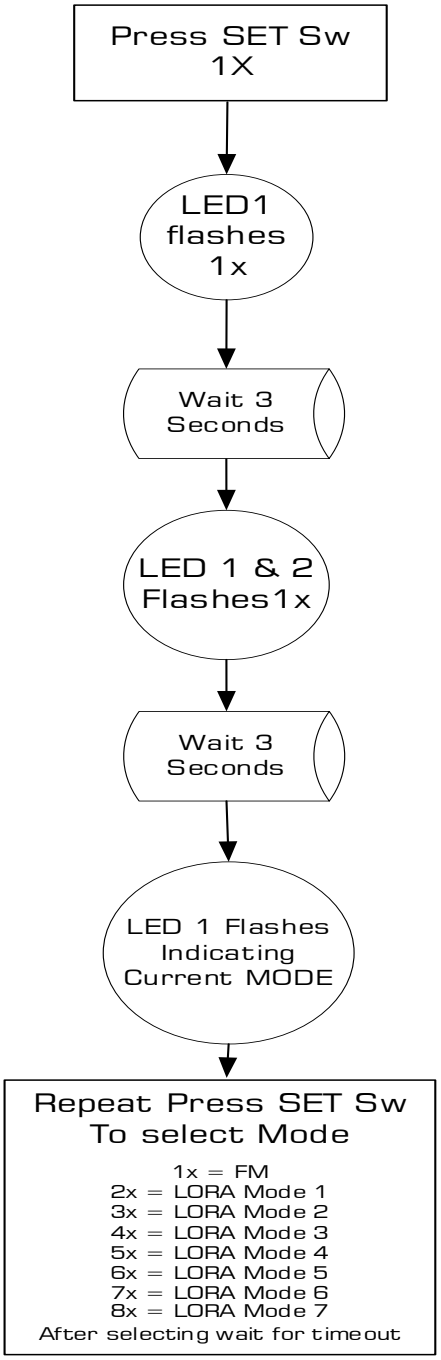

This sets the type of RF Transmission.

Possible options are FM, or LORA Modes 0 - 7. FM or LORA mode 0 provides the quickest response; from Transmitter SW pressed to Receiver Relay output.

LORA mode 7 provides the longest operating range but with the longest time delay of from button press to receiver relay actuation.

Notes

1. Range is dependant on many factors including the mode of transmission. Range can be reduced by 75% in built up areas with poor antenna, and environmental conditions.
2. Battery life quoted is approximate based on 30 operations per day.
3. 918MHz devices do not have FSK mode.

RF Transmission	Mode (No of LED1 Flashes)	Propagation Time from TX to output Activated (approx)	Operations from a Single battery charge
FM	1	20 mS	1Million
LoRa Mode 1	2	20 mS	~550K
LoRa Mode 2	3	40 mS	288K
LoRa Mode 3	4	80 mS	144K
LoRa Mode 4	5	160 mS	72K
LoRa Mode 5	6	320 mS	36K
LoRa Mode 6	7	640 mS	18K
LoRa Mode 7	8	1.28 Secs	~9,000

To Set Continuous or State Change RF Transmissions

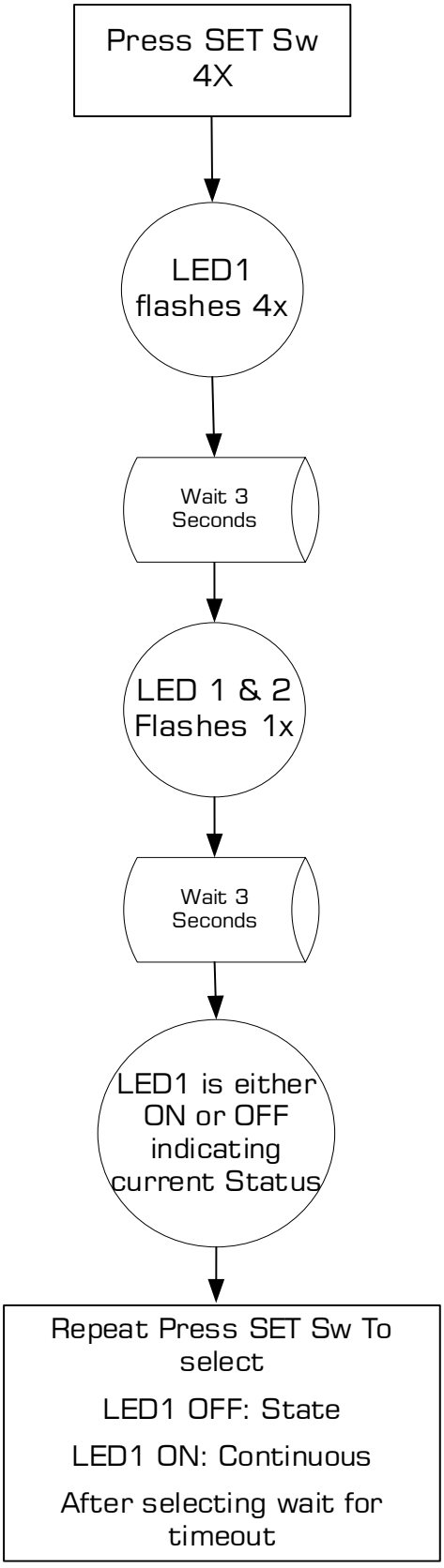

When a switch button is operated, TAURUS will transmit a "Button Down" RF Transmission.

When a switch button is released, TAURUS will transmit a "Button Up" RF Transmission.

Continuous Transmit

TAURUS repeat transmits "button Down" in short bursts for as long as switch button is pressed.

If the Acknowledgment is ON the receiver will reply after each RF transmission burst.

This is ideally suited to momentary operation where the receiver output needs to be active as long as the user presses down a TAURUS Button.

State Change Transmit

TAURUS transmits an RF transmission only when the switch button is pressed or released (i.e. a state change).

On each of these "state changes" TAURUS transmits up to 4 transmissions, or, "RF packets" (which can be seen by the GREEN LED flashing up to 4 times,

If the Acknowledgment is ON the receiver will reply immediately.

After receiving an Acknowledgment the TAURUS will cease sending any remaining of the 4 transmissions.

LED Status



Continuous Transmission Acknowledgement OFF		
Operation	GREEN LED	RED LED
Button is briefly pressed	Flashes briefly	No-operation
Button is held Down	Flashes constantly	No-operation
Button is released	Flashes briefly	No-operation

Continuous Transmission Acknowledgement ON		
Operation	GREEN LED	RED LED
Button is briefly pressed	Flashes briefly (TX then RX ack)	Flashes if no Ack received
Button is held Down	Flashes continually (TX then RX ack)	Flashes if no Ack received
Button is released	Flashes briefly (TX then RX ack)	Flashes if no Ack received

State Change Transmission Acknowledgement OFF		
Operation	GREEN LED	RED LED
Button is briefly pressed	Flashes 1X (TX)	No-operation
Button is held Down	No-operation	No-operation
Button is released	Flashes 1X (TX)	No-operation

State Change Transmission Acknowledgement ON		
Operation	GREEN LED	RED LED
Button is briefly pressed & Receiver, ack OK	Flashes (TX then RX ack)	No-operation
Button is briefly pressed & Receiver, NOK	Flashes continually (awaiting Ack)	Flashes to show no Ack received
Button is held Down	Flashes continually (awaiting Ack)	Flashes to show no Ack received
Button is released	Flashes 2 - 5X (TX and RX ack)	Flashes if no Ack received

To Set Acknowledgement Request

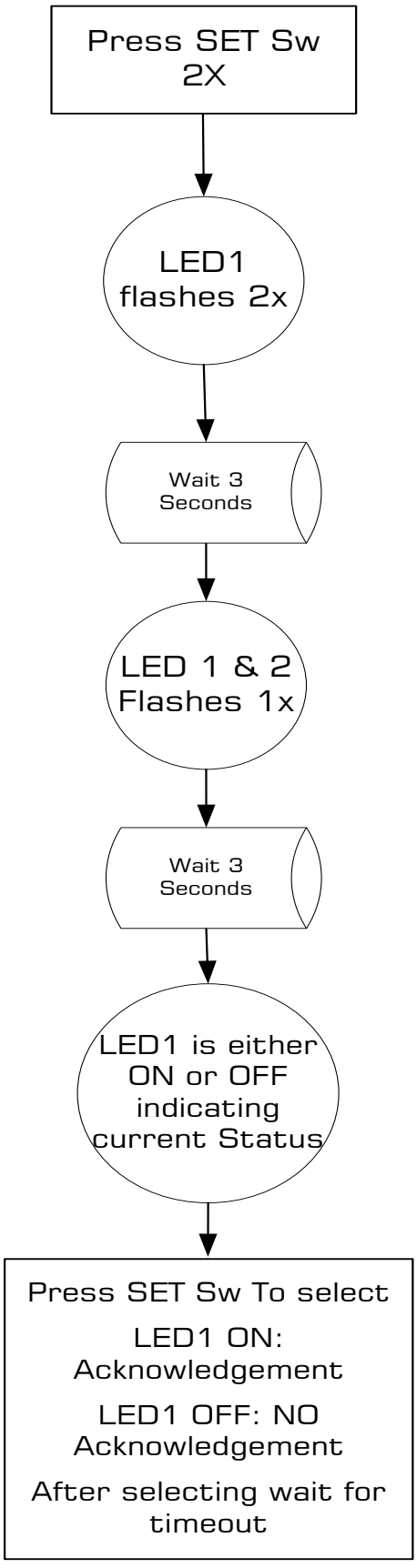

Acknowledgement Feature provides the user with LED indication that the receiver has successfully received the transmitters signal.

When activated the TAURUS Transmitter includes an acknowledgement request within each radio transmission.

The response from the receiver is indicated on the transmitter via the RED / GREEN LEDs.

RF Acknowledgment from Receiver - Warning!

When Acknowledgement is ON, TAURUS requests an RF signal back from the receiver. Whilst in theory if an RF signal can be transmitted one way then it can be returned, in practice occasionally the received acknowledgement many not penetrate as well as the Taurus transmitted signal.

To Set Watchdog Transmissions

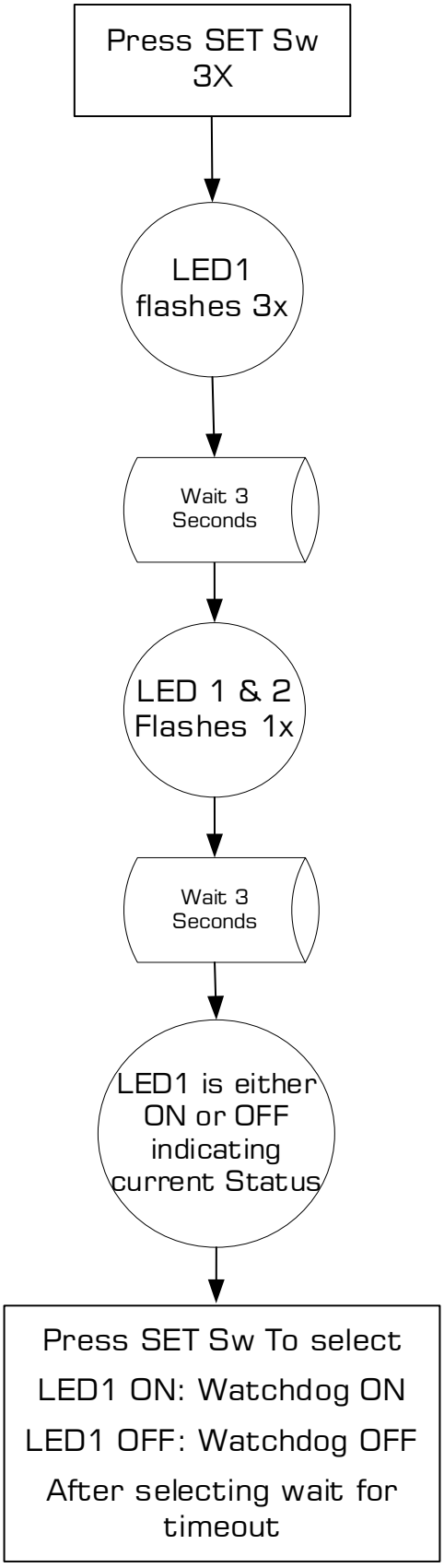

If enabled, TAURUS automatically transmits a background "watchdog" RF Signal approx. every ~45 secs,

RF Solutions Receivers with a Watchdog feature will hold a Relay contact "ENERGISED" as long as Watchdog is regularly received confirming the transmitter is in range and the system is operating correctly.

When using Watchdog it may be useful to incorporate a Power Switch to avoid premature battery discharge.

A power switch can be incorporated if this is required please contact our Sales Dept.

Simplified Declaration of Conformity (RED)

BG - С настоящото RF Solutions Limited декларира, че този тип радиосъоръжение дефинирани в този документ е в съответствие с Директива 2014/53/ЕС. Цялостният текст на ЕС декларацията за съответствие може да се намери на следния интернет адрес: www.rfsolutions.co.uk

CS -Tímto RF Solutions Limited prohlašuje, že typ rádiového zařízení definované v tomto dokumentu je v souladu se směrnicí 2014/53/EU. Úplné znění EU prohlášení o shodě je k dispozici na této internetové adrese: www.rfsolutions.co.uk

DA - Hermed erklærer RF Solutions Limited , at radioudstyrstypen defineret i dette dokument er i overensstemmelse med direktiv 2014/53/EU. EU-overensstemmelseserklæringens fulde tekst kan findes på følgende internetadresse: www.rfsolutions.co.uk

DE - Hiermit erklärt RF Solutions Limited , dass der Funkanlagentyp in diesem Dokument definiert der Richtlinie 2014/53/EU entspricht. Der vollständige Text der EU-Konformitätserklärung ist unter der folgenden Internetadresse verfügbar: www.rfsolutions.co.uk

EL - Με την παρούσα ο/η RF Solutions Limited , δηλώνει ότι ο ραδιοεξοπλισμός ορίζεται σε αυτό το έγγραφο πληροί την οδηγία 2014/53/ΕΕ. Το πλήρες κείμενο της δήλωσης συμμόρφωσης ΕΕ διατίθεται στην ακόλουθη ιστοσελίδα στο διαδίκτυο: www.rfsolutions.co.uk

EN - Hereby, RF Solutions Limited declares that the radio equipment type defined within this document is in compliance with Directive 2014/53/EU. The full text of the EU declaration of conformity is available at the following internet address: www.rfsolutions.co.uk

ES - Por la presente, RF Solutions Limited declara que el tipo de equipo radioeléctrico definido dentro de este documento es conforme con la Directiva 2014/53/UE. El texto completo de la declaración UE de conformidad está disponible en la dirección Internet siguiente: www.rfsolutions.co.uk

ET -Käesolevaga deklareerib RF Solutions Limited , et käesolev raadioseadme tüüp määratletud selles dokumendis vastab direktiivi 2014/53/EL nõuetele. ELi vastavusdeklaratsiooni täielik tekst on kättesaadav järgmisel internetiaadressil: www.rfsolutions.co.uk

FI -RF Solutions Limited vakuuttaa, että radiolaitetyyppi määratletud selles dokumendis on direktiivin 2014/53/EU mukainen. EU-vaatimustenmukaisuusvakuutuksen täysimittainen teksti on saatavilla seuraavassa internetosoitteessa: www.rfsolutions.co.uk

FR - Le soussigné, RF Solutions Limited , déclare que l'équipement radioélectrique du type défini dans ce document est conforme à la directive 2014/53/UE. Le texte complet de la déclaration UE de conformité est disponible à l'adresse internet suivante: www.rfsolutions.co.uk

HR - RF Solutions Limited ovime izjavljuje da je radijska oprema tipa definirani u ovom dokumentu u skladu s Direktivom 2014/53/EU. Cjeloviti tekst EU izjave o sukladnosti dostupan je na sljedećoj internetskoj adresi: www.rfsolutions.co.uk

HU - RF Solutions Limited igazolja, hogy a dokumentumban meghatározottak szerint típusú rádióberendezés megfelel a 2014/53/EU irányelvnek. Az EU-megfelelőségi nyilatkozat teljes szövege elérhető a következő internetes címen: www.rfsolutions.co.uk

IT - Il fabbricante, RF Solutions Limited , dichiara che il tipo di apparecchiatura radio definito all'interno di questo documento è conforme alla direttiva 2014/53/UE. Il testo completo della dichiarazione di conformità UE è disponibile al seguente indirizzo Internet: www.rfsolutions.co.uk

LT - Aš, RF Solutions Limited , patvirtinu, kad radijo įrenginių tipas apibrėžta šiame dokumente atitinka Direktyvą 2014/53/ES. Visas ES atitikties deklaracijos tekstas prieinamas šiuo interneto adresu: www.rfsolutions.co.uk

LV - Ar šo RF Solutions Limited deklarē, ka radioiekārta kas definēts šajā dokumentā atbilst Direktīvai 2014/53/ES. Pilns ES atbilstības deklarācijas teksts ir pieejams šādā interneta vietnē: www.rfsolutions.co.uk

MT - B'dan, RF Solutions Limited , niddikjara li dan it-tip ta' tagħmir tar-radju definit f'dan id-dokument huwa konformi mad-Direttiva 2014/53/UE. It-test kollu tad-dikjarazzjoni ta' konformità tal-UE huwa disponibbli f'dan l-indirizz tal-Internet li ġej: www.rfsolutions.co.uk

NL - Hierbij verklaar ik, RF Solutions Limited , dat het type radioapparatuur gedefinieerd in dit document conform is met Richtlijn 2014/53/EU. De volledige tekst van de EU-conformiteitsverklaring kan worden geraadpleegd op het volgende internetadres: www.rfsolutions.co.uk

PL - RF Solutions Limited niniejszym oświadcza, że typ urządzenia radiowego zdefiniowane w tym dokumencie jest zgodny z dyrektywą 2014/53/UE. Pełny tekst deklaracji zgodności UE jest dostępny pod następującym adresem internetowym: www.rfsolutions.co.uk

PT - O(a) abaixo assinado(a) RF Solutions Limited declara que o presente tipo de equipamento de rádio definido neste documento está em conformidade com a Diretiva 2014/53/UE. O texto integral da declaração de conformidade está disponível no seguinte endereço de Internet: www.rfsolutions.co.uk

RO - Prin prezenta, RF Solutions Limited declară că tipul de echipamente radio definit în acest document este în conformitate cu Directiva 2014/53/UE. Textul integral al declarației UE de conformitate este disponibil la următoarea adresă internet: www.rfsolutions.co.uk

SK - RF Solutions Limited týmto vyhlasuje, že rádiové zariadenie typu definované v tomto dokumente je v súlade so smernicou 2014/53/EÚ. Úplné EÚ vyhlásenie o zhode je k dispozícii na tejto internetovej adrese: www.rfsolutions.co.uk

SL - RF Solutions Limited potrjuje, da je tip radijske opreme opredeljeno v tem dokumentu skladen z Direktivo 2014/53/EU. Celotno besedilo izjave EU o skladnosti je na voljo na naslednjem spletnem naslovu: www.rfsolutions.co.uk

SV - Härmed försäkrar RF Solutions Limited att denna typ av radioutrustning definieras i detta dokument överensstämmer med direktiv 2014/53/EU. Den fullständiga texten till EU-försäkran om överensstämmelse finns på följande webbadress: www.rfsolutions.co.uk

RF Solutions Ltd. Recycling Notice
Meets the following EC Directives:
DO NOT Discard with normal waste, please recycle.
ROHS Directive 2011/65/EU and amendment 2015/863/EU
Specifies certain limits for hazardous substances.
WEEE Directive 2012/19/EU
Waste electrical & electronic equipment. This product must be disposed of through a licensed WEEE collection point. RF Solutions Ltd., fulfils its WEEE obligations by membership of an approved compliance scheme.
Environment Agency producer registration number: WEE/JB0104WV.

Waste Batteries and Accumulators Directive 2006/66/EC
Where batteries are fitted, before recycling the product, the batteries must be removed and disposed of at a licensed collection point.
RF Solutions battery producer number: **BPRN00060.**

Disclaimer:
Whilst the information in this document is believed to be correct at the time of issue, RF Solutions Ltd does not accept any liability whatsoever for its accuracy, adequacy or completeness. No express or implied warranty or representation is given relating to the information contained in this document. RF Solutions Ltd reserves the right to make changes and improvements to the product(s) described herein without notice. Buyers and other users should determine for themselves the suitability of any such information or products for their own particular requirements or specification(s). RF Solutions Ltd shall not be liable for any loss or damage caused as a result of user's own determination of how to deploy or use RF Solutions Ltd's products. Use of RF Solutions Ltd products or components in life support and/or safety applications is not authorised except with express written approval. No licences are created, implicitly or otherwise, under any of RF Solutions Ltd's intellectual property rights. Liability for loss or damage resulting or caused by reliance on the information contained herein or from the use of the product (including liability resulting from negligence or where RF Solutions Ltd was aware of the possibility of such loss or damage arising) is excluded. This will not operate to limit or restrict RF Solutions Ltd's liability for death or personal injury resulting from its negligence.