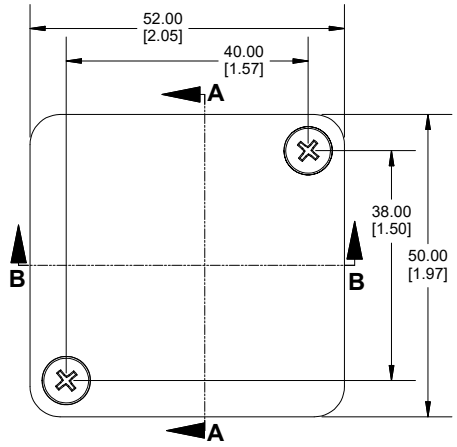

TOP VIEW

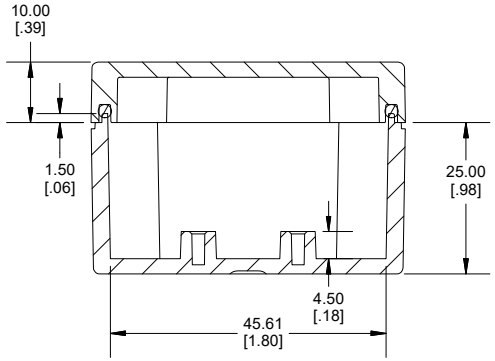

SECTION B-B
SIDE VIEW

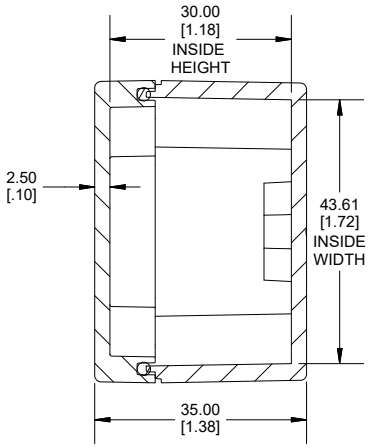

SECTION A-A
END VIEW

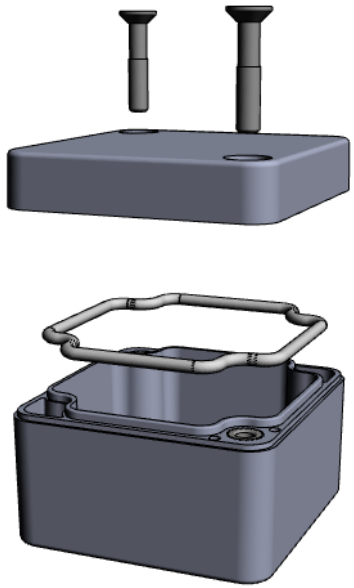

Enclosures can be Factory Modified (Milling, Drilling, Printing etc.)
Contact Factory (modshop@hammfg.com) for quotes
Solid models of this enclosure available in .stp or .x_t
(Part number and text placement/orientation on our products are subject to change, we do not recommend using them as a locating reference for modification purposes)

NOTE
Purchased assembly includes Box, Lid, String Gasket, 4 PCB screws, and 2 Lid screws.
Recommended Torque : (43-50) Ozf.in / (30-35) cN.m

RZ Enclosure	
Polycarbonate Off-White (UL94-V2)	RZ0250
Polycarbonate Off-White with Clear Lid (UL94-V2)	RZ0250C
General Purpose ABS Light Grey (UL94 HB)	RZ0362
General Purpose ABS Light Grey with Polycarbonate Clear Lid (UL94 HB)	RZ0362C
ACCESSORIES	
Cover Screw (M4-0.7 X 20mm) (50 Pkg)	SC618-50
PCB Screw Self Tapping (M3 X 6mm) (50 Pkg)	SC622-50
String Gasket EPDM Grey (2 Pkg)	RZ0362GASKET

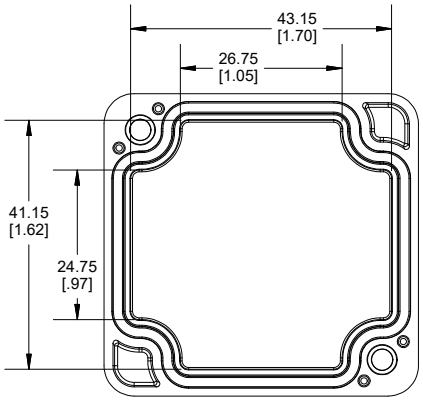

INSIDE LID

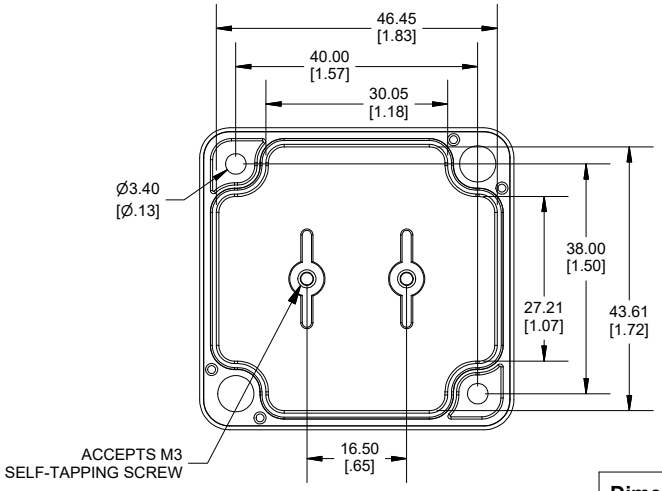

INSIDE BOX

Dimensions:
mm
[inches]

HAMMOND MANUFACTURING®

RZ0250 (0362)

www.hammondmfg.com