U.310 - Outside pullers



Description:

● Versatile: takes 2 or 3 legs. Converts into inside puller with the legs U.306G3 + screw U.20B1.
● Comfort: self-gripping legs by return spring. The puller stays in rolling position even when not in tension.
● Safety: legs locked in position on the bearing using a knob. No risk for the puller to escape from the bearing.
● Adaptable puller accessories: hydraulic screw U.3 and slide hammer U.2.

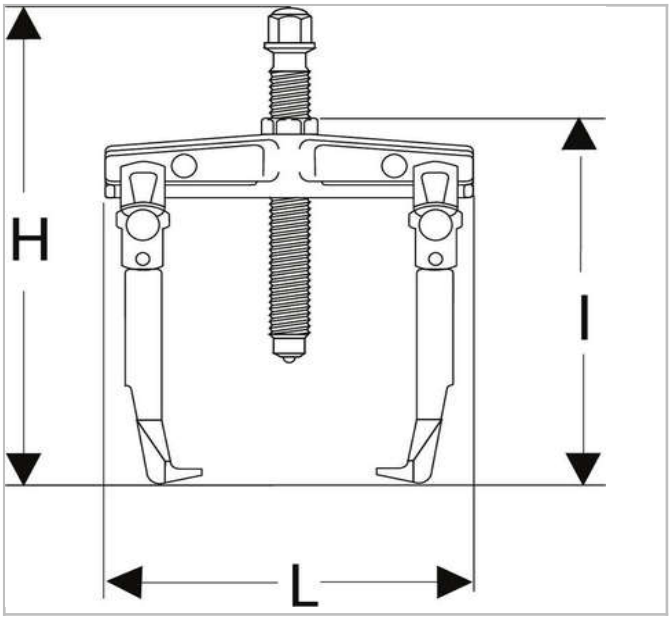

© FACOM 2020

	Depth Maxi [mm]	Length L [mm]	Height H [mm]	C Mini - Maxi [mm]	Length [mm]	Hex Size [mm]	Screw Size [']	t [']	Weight [Kg]	Legs_Multi [']	Screw Size Multi [']	Tonnes [']
U.310-170	170.0	143.0	365.0	15 - 170	300.0	24.0	U.20B1	100.0	4.6	U.310G1	24.0	10.0
U.310-250	250.0	163.0	420.0	15 - 250	380.0	24.0	U.310-250-10	100.0	5.6	U.310G2	24.0	10.0

© FACOM 2020