DATASHEET



PS116-Z12-ST-K240

- connector plug M12, bottom
- Snap action 1 Normally open contact (NO) / 2 Opener (NC)
- Thermoplastic enclosure
- Symmetric enclosure
- Protection class IP66, IP67
- Actuator heads can be repositioned by 8 x 45°

Data

Ordering data

Product type description	PS116-Z12-ST-K240
Article number (order number)	103006665
EAN (European Article Number)	4030661442969
eCl@ss number, version 12.0	27-27-26-01
eCl@ss number, version 11.0	27-27-26-01
eCl@ss number, version 9.0	27-27-26-01
ETIM number, version 7.0	EC000030
ETIM number, version 6.0	EC000030

Approvals - Standards

Certificates	cULus CCC

General data

Standards	EN IEC 60947-5-1
Housing construction form	Norm construction design
Actuator type to EN 50047	e

Housing material	Plastic, glass-fibre reinforced thermoplastic, zinc die-cast, chromated
Active area	Metal film
Gross weight	g

General data - Features

Safety functions	Yes
Number of auxiliary contacts	1
Number of safety contacts	2

Safety classification

Standards	EN ISO 13849-1
B_{10D} Normally-closed contact (NC)	20,000,000 Operations
B_{10D} Normally-open contact (NO)	1,000,000 Operations
Note	at 10% I_e and ohmic load
Mission time	20 Year(s)

Mechanical data

Actuating element	Angle roller lever K240
Roller material	Plastic
Mechanical life, minimum	10,000,000 Operations
Actuating force, minimum	6 N
Positive break force, minimum	40 N
Actuating speed, minimum	10 mm/min
Actuating speed, maximum	1 m/s
Actuating torque, minimum	0.2 Nm
Positive break torque	0.6 Nm

Mechanical data - Connection technique

Connector position	Bottom

Termination	Connector M12, 6-pole
Wire cross-section	0.5 mm^2
Terminal (mechanical)	bottom

Mechanical data - Dimensions

Length of sensor	16.6 mm
Width of sensor	31 mm
Height of sensor	95.5 mm
Diameter of Castor	22 mm

Ambient conditions

Degree of protection	IP66 IP67
Ambient temperature	-30 ... +80 °C
Protection class	II

Ambient conditions - Insulation values

Rated insulation voltage U_i	300 V
Rated impulse withstand voltage U_{imp}	4 kV
Degree of pollution	3

Electrical data

Required rated short-circuit current	400 A
Utilisation category AC-15	240 VAC
Utilisation category AC-15	3 A
Utilisation category DC-13	24 VDC
Utilisation category DC-13	1.5 A
Switching element	1 NO contact, 2 NC contacts
Switching principle	Snap action
Bounce duration, maximum	3 ms

Maximum switching frequency	5,000 /h
Switchover time, maximum	5.5 ms
Material of the contacts, electrical	Silver

Ordering code

Product type description:
PS116-(1)-(2)-(3)-(4)

(1)

Z11	Snap action 1 NO contact / 1 NC contact
Z02	Snap action 2 NC contacts
Z12	Snap action 1 NO contact / 2 NC contact
Z11R	Snap action 1 NO contact / 1 NC contact with latching
Z02R	Snap action 2 NC contacts with latching
Z12R	Snap action 1 NO contact / 2 NC contact with latching
T11	Slow action 1 NO contact / 1 NC contact
T02	Slow action 2 NC contacts
T20	Slow action 2 NO contact
T12	Slow action 1 NO contact / 2 NC contact
T21	Slow action 2 NO contact / 1 NC contact
T03	Slow action 3 NC contacts
T11UE	Slow action 1 NO contact / 1 NC contact with overlapping contacts
T02H	Slow action 2 NC contacts with staggered contacts

(2)

L200	Connecting cable bottom, cable length 2 m
LR200	Connecting cable right, cable length 2 m
LR300	Connecting cable right, cable length 3 m
LR500	Connecting cable right, cable length 5 m
ST	Connector plug M12 - plastic - bottom
STR	Connector plug M12, right

(3)

S200	plunger S200 Ø 6 mm
R200	Roller plunger R200
K200	Offset roller lever - plastic roller- width 5.3 mm - Ø 12 mm
K210	Offset roller lever - plastic roller- width 5mm - Ø 14mm
K230	Angle roller lever - plastic roller Ø 14 mm
K240	Angle roller lever with plastic roller Ø 22 mm - right-bent
K250	Angle roller lever with plastic roller Ø 22 mm - left-bent
H200	Roller lever - plastic roller Ø 16 m - lever length 24 mm
N200	Roller lever 2 mm Toothing (24...26mm) - Plastic roller Ø 20 mm - Width 9.8 mm
J200	Rod lever - plastic - 200mm -Ø 6mm

(4)

0	Material Castor/Lever: Plastic
1	Material Castor/Lever: Stainless steel
2	Material Castor/Lever: Brass
3	Material Castor/Lever: Aluminium
4	Material Castor/Lever: Steel

Pictures

Product picture (catalogue individual photo)



ID: kps1kf25
| 679.7 kB | .jpg | 352.425 x 586.317 mm - 999 x 1662 px - 72 dpi
| 47.3 kB | .png | 74.083 x 123.119 mm - 210 x 349 px - 72 dpi
| 32.9 kB | .jpg | 74.083 x 123.472 mm - 210 x 350 px - 72 dpi

Dimensional drawing basic component

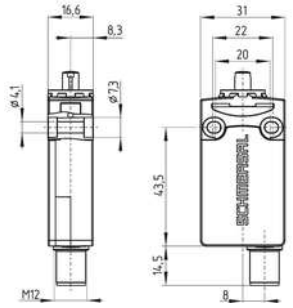

ID: kps11g02
| 252.3 kB | .ai | 200 x 200 mm - 566 x 566 px - 72 dpi
| 4.8 kB | .png | 74.083 x 70.203 mm - 210 x 199 px - 72 dpi
| 148.1 kB | .jpg | 352.778 x 333.728 mm - 1000 x 946 px - 72 dpi

Dimensional drawing actuator

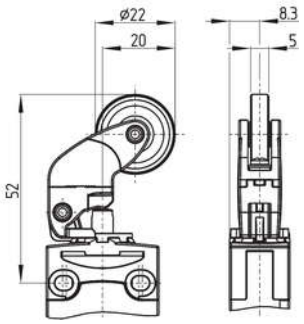

ID: kps11b07
| 410.7 kB | .ai | 110.124 x 108.395 mm - 312 x 307 px - 72 dpi
| 5.6 kB | .png | 74.083 x 73.025 mm - 210 x 207 px - 72 dpi
| 221.1 kB | .jpg | 352.778 x 376.767 mm - 1000 x 1068 px - 72 dpi

Switch travel diagram

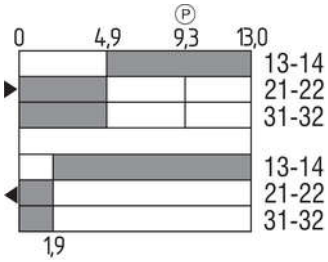

ID: kps11s39
| 2.7 kB | .png | 74.083 x 58.914 mm - 210 x 167 px - 72 dpi
| 106.5 kB | .jpg | 352.778 x 280.458 mm - 1000 x 795 px - 72 dpi

Diagram

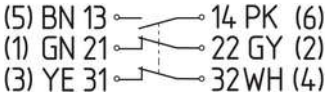

ID: kps16k03
| 85.8 kB | .jpg | 352.778 x 97.367 mm - 1000 x 276 px - 72 dpi
| 4.0 kB | .png | 74.083 x 20.461 mm - 210 x 58 px - 72 dpi

Diagram

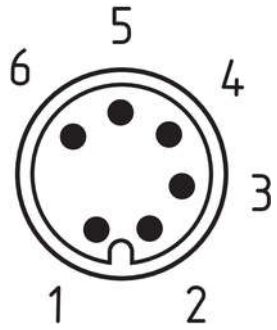

ID: km12-k6e
| 1.3 MB | .cdr |
| 130.2 kB | .jpg | 352.778 x 386.292 mm - 1000 x 1095 px - 72 dpi
| 4.7 kB | .png | 73.731 x 80.786 mm - 209 x 229 px - 72 dpi

Contact arrangement

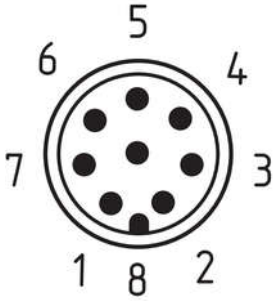

ID: km12-k8b
| 5.3 kB | .png | 73.731 x 87.489 mm - 209 x 248 px - 72 dpi
| 138.6 kB | .jpg | 352.425 x 417.689 mm - 999 x 1184 px - 72 dpi