E12451

Sealing set

HYDRAULIC SPARE PARTS KIT

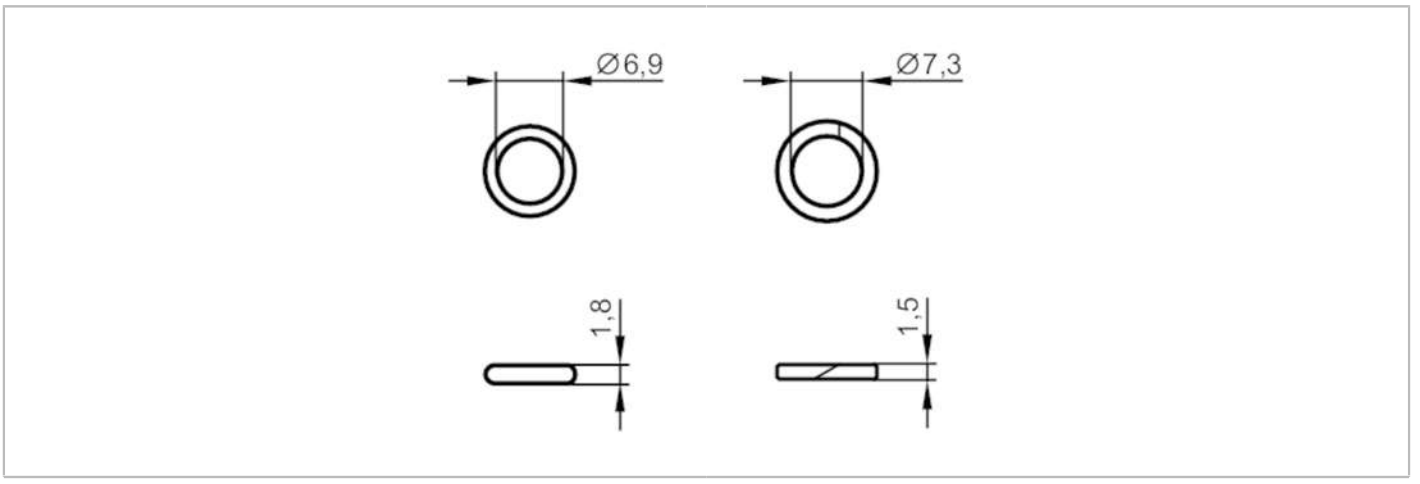

Mechanical data		
Weight	[g]	2.9
Materials		O-ring: FKM; supporting ring: PTFE

Accessories	
Items supplied	O-ring: 5, (FPM)
	supporting ring: 5, (PTFE)

Remarks	
Pack quantity	1 pcs.