- **Port size: 3/8” ... 3/4” (ISO G/NPT)**
- **Excelon design allows in-line installation or modular installation with other Excelon products**
- **High efficiency oil and particle removal**
- **Quick release bayonet bowl**
- **Service indicator standard**





Technical features

Medium:
Compressed air only
Maximum operating pressure:
Transparent bowl:
10 bar (145 psi)
Metal bowl:
17 bar (250 psi)
Remaining oil content:
0,01 mg/m³ at +21°C (69°F)
Particle removal:
To 0,01 µm
Port size:
G3/8, G1/2, G3/4
3/8 PTF 1/2 PTF , 3/8 PTF

Flow:
Maximum flow to maintain stated oil removal performance
F74C: 16 dm³/s, F74H 28 dm³/s at port size: 1/2”
Operating pressure: 6,3 bar (91 psi)
Drain:
Manual, automatic
Automatic drain operating conditions (float operated):
Bowl pressure required to close drain: > 0,35 bar (5 psi)
Bowl pressure required to open drain: ≤ 0,2 bar (2.9 psi)
Minimum air flow required to close drain: 1 dm³/s (2 scfm)
Manual operation: depress pin inside drain outlet to drain bowl

Ambient/Media temperature:
Transparent bowl:
-34 ... +50°C (-29 ... +122°F)
Metal bowl:
-34 ... +65°C (-29 ... +149°F)
Air supply must be dry enough to avoid ice formation at temperatures below +2°C (+35°F).

Note:
Install an F74G filter with a 5 µm filter element upstream of the F74C/H filter for maximum service life.

Materials:
Body: Die cast aluminium
Bowl: Transparent PC with steel guard or die cast aluminium
Element: Synthetic fibre & PE foam
Elastomers: CR & NBR

Technical data - standard models

Symbol	Port size	Size	Drain	Bowl with guard	Weight (kg)	Model
	G3/8		Manual	PC (transparent)	0,85	F74C-3GD-QP0
	G1/2	Basic	Manual	PC (transparent)	0,83	F74C-4GD-QP0
	G1/2	Basic	Manual	PC (transparent)	1,11	F74H-4GD-QP0
	G3/4		Manual	PC (transparent)	1,10	F74H-6GD-QP0
	G3/8		Automatic	PC (transparent)	0,85	F74C-3GD-AP0
	G1/2	Basic	Automatic	PC (transparent)	0,83	F74C-4GD-AP0
	G1/2	Basic	Automatic	PC (transparent)	1,11	F74H-4GD-AP0
	G3/4		Automatic	PC (transparent)	1,10	F74H-6GD-AP0

Option selector

F74★-★★★-★★0

Series	Substitute
Standard *1)	C
High flow *2)	H
Port size	**Substitute**
3/8”	3
1/2”	4
3/4”	6
Thread form	**Substitute**
PTF	A
ISO G parallel (standard)	G
Service life indicator	**Substitute**
With (visual, standard)	D
Without	N

Bowl	Substitute
Metal	D
Transparent with guard (standard)	P
Drain	**Substitute**
Manual	Q
Automatic	A

*1) available with 3/8 or 1/2” ports
*2) available with 1/2 or 3/4” ports

Our policy is one of continued research and development. We therefore reserve the right to amend, without notice, the specifications given in this document. (1998 - 8057c) © 2015 Norgren Inc.

Typical performance characteristics

Inlet pressure (bar)	Maximum flow dm³/s* F74C	F74H
1	6,4	11,2
3	11	19,3
5	14,3	24,9
6,3	16	28
7	16,9	29,5
9	19,1	33,5

* Maximum flow to maintain stated oil removal performance

Flow characteristics

F74C
Port size 1/4“
Dry element

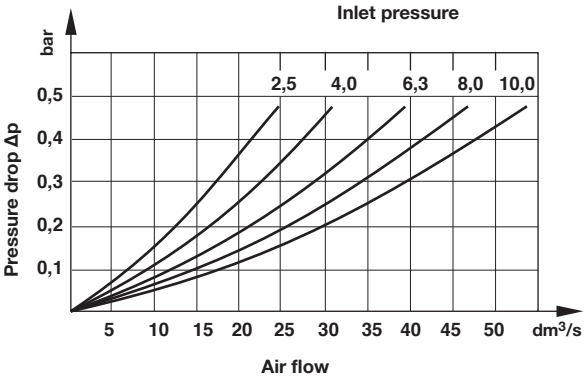

F74H
Port size 1/4“
Dry element

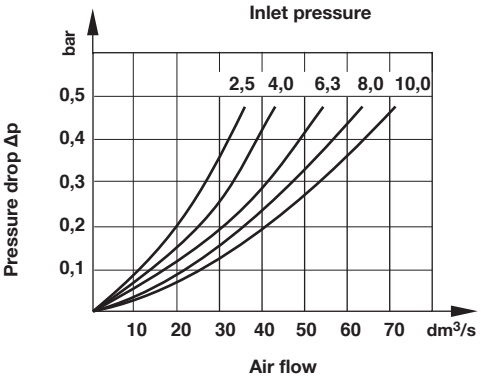

Accessories

Wall mounting bracket	Quikclamp®	Quikclamp with wall bracket®	Quikmount pipe adaptor *1)	Porting block with three alternative 1/4” ports	2/2 Shut-off valves (for full technical specification see datasheet 8.200.600)	3/2 Shut-off valves (for full technical specification see datasheet 8.200.600)
						
Page 4	Page 3	Page 3	Page 3	Page 3	Page 4	Page 4
4324-50	4314-51	4314-52	G3/8: 4315-10	G1/4: 4316-52	G 3/8: T74B-3GA-P1N	G 3/8: T74T-3GA-P1N
			G1/2: 4315-11	1/4 PTF: 4316-50	G 1/2: T74B-4GA-P1N	G 1/2: T74T-4GA-P1N
			G3/4: 4315-12		G 3/4: T74B-6GA-P1N	G 3/4: T74T-6GA-P1N
			3/8 PTF: 4315-02			
			1/2 PTF: 4315-03			1/2 PTF: T74T-4AA-P1N
			3/4 PTF: 4315-04		3/4 PTF: T74B-6AA-P1N	3/4 PTF: T74T-6AA-P1N

*1) Please use a Quikmount pipe adaptor if the Quikclamp be mounted at inlet or outlet side.

Pressure switch

Porting block for pressure switch	Pressure switch (0,5 ... 8 bar)
	
Page 4	
0523110000000000	0881300000000000

Padlock

Padlock (brass) with two keys *1)

0613633000000000

*1) for shut-off valves

Service kits

Manual drain	Automatic drain	Replacement element
		
F74H-KITM0C	F74H-KITA0C	4344-02
F74C-KITM0C	F74C-KITA0C	4344-01

Our policy is one of continued research and development. We therefore reserve the right to amend, without notice, the specifications given in this document. (1998 - 8057c) © 2015 Norgren Inc.

Drawings

Dimensions in mm
Projection/First angle

F74C

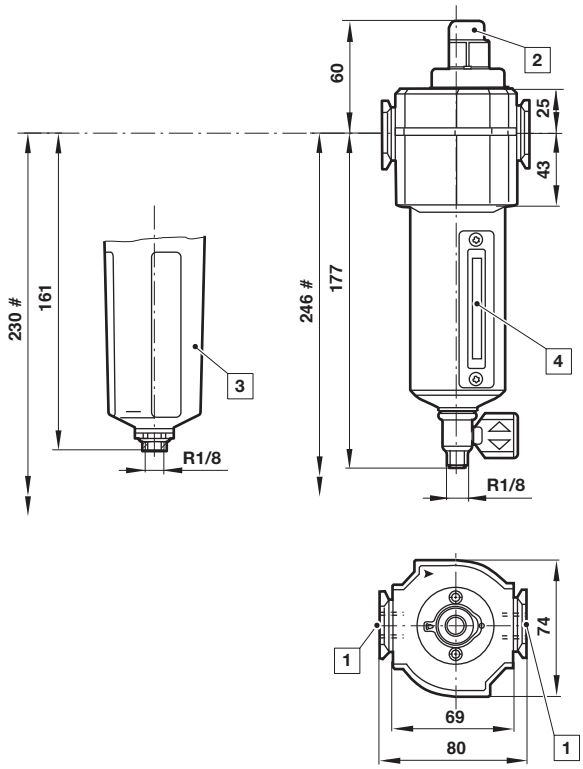

F74H

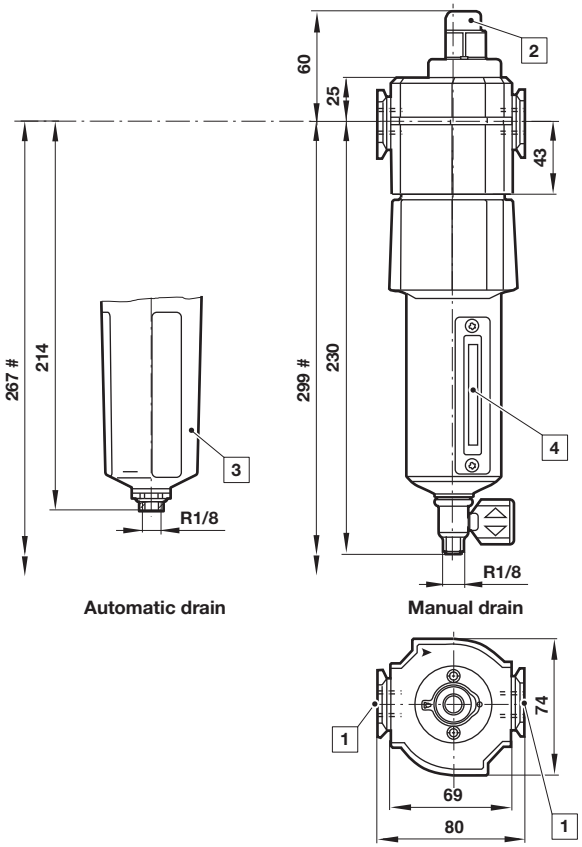

Minimum clearance required to remove bowl
1 Main ports 3/8", 1/2" or 3/4"
2 Service life indicator
3 Transparent bowl with guard
4 Metal bowl with liquid level indicator lens

Accessories

Quikclamp®

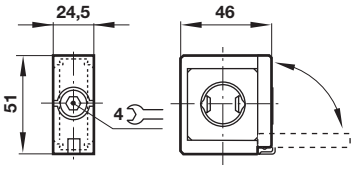

Quikclamp® with wall bracket

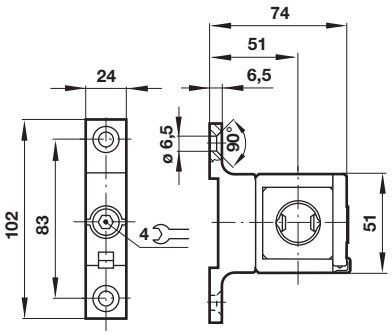

Porting block

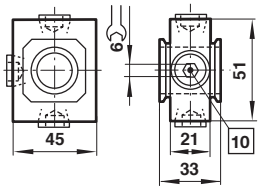

10 Ports 1/4" ISO G/PTF plugged

Pipe adapter

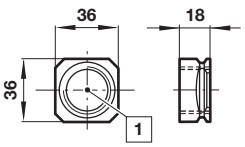

1 Main ports 3/8", 1/2" or 3/4" ISO G/PTF

Our policy is one of continued research and development. We therefore reserve the right to amend, without notice, the specifications given in this document. (1998 - 8057c) © 2015 Norgren Inc.

Wall mounting bracket

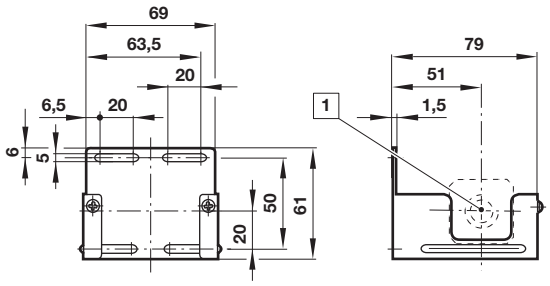

1 Main ports

Shut-off valves

Dimensions in mm
Projection/First angle

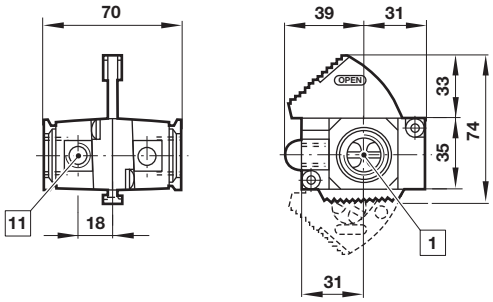

1 Main ports 3/8", 1/2" or 3/4" ISO G/PTF
11 Exhaust port 1/8"

Porting block for pressure switch

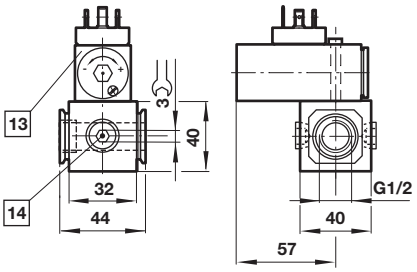

13 Pressure switch is not in scope of delivery
14 Alternative G1/4 ports plugged

Warning

These products are intended for use in industrial compressed air systems only. Do not use these products where pressures and temperatures can exceed those listed under **»Technical features/data«**.
Before using these products with fluids other than those specified, for non-industrial applications, life-support systems or other applications not within published specifications, consult IMI Precision Engineering, Norgren Inc.
Through misuse, age, or malfunction, components used in fluid power systems can fail in various modes.

The system designer is warned to consider the failure modes of all component parts used in fluid power systems and to provide adequate safeguards to prevent personal injury or damage to equipment in the event of such failure.
System designers must provide a warning to end users in the system instructional manual if protection against a failure mode cannot be adequately provided.
System designers and end users are cautioned to review specific warnings found in instruction sheets packed and shipped with these products.

Our policy is one of continued research and development. We therefore reserve the right to amend, without notice, the specifications given in this document. (1998 - 8057c) © 2015 Norgren Inc.