Product Data Sheet
June 2013
00813-0100-4030, Rev GB

Rosemount 2120

Full-featured Vibrating Fork Liquid Level Switch



- Function virtually unaffected by flow, bubbles, turbulence, foam, vibration, solids content, coating products, liquid properties, and product variations
- No need for calibration and requires a minimum amount of installation
- Easy terminal access, polarity insensitive, and short circuit protection
- Electronic self-checking and condition monitoring
- Adjustable switching delay for turbulent or splashing applications
- Magnetic test point makes functional test easy
- “Fast Drip” fork design gives quicker response
- Explosion-proof/Flameproof and Intrinsically Safe options

ROSEMOUNT®

EMERSON™
Process Management

Overview of the Rosemount 2120



Adjustable Mode and Switching Delay



'Fast Drip' Forks

Measurement principle

The Rosemount 2120 is designed using the principle of a tuning fork. A piezo-electric crystal oscillates the forks at their natural frequency. Changes to this frequency are continuously monitored. The frequency of the vibrating fork sensor changes depending on the medium in which it is immersed. The denser the liquid, the lower the frequency.

When used as a **low level alarm**, the liquid in the tank or pipe drains down past the fork, causing a change of natural frequency that is detected by the electronics and switches the output state.

When the 2120 is used as a **high level alarm**, the liquid rises in the tank or pipe, making contact with the fork which then causes the output state to switch.

Key features and benefits

- Virtually unaffected by turbulence, foam, vibration, solids content, coating products, or liquid properties
- The 2120 is designed for operation in process temperatures from –40 to 302 °F (–40 to 150 °C)
- A 'heartbeat' LED indicates its operating state. The LED also flashes when the switch output is 'off' and is constantly lit when 'on'
- Adjustable switching delay prevents false switching in turbulent or splashing applications
- 'Fast Drip' fork design gives quicker response time, especially with viscous liquids
- Rapid wet-to-dry and dry-to-wet time setting for highly responsive switching
- Fork shape is optimized for hand polishing to meet hygienic requirements
- No moving parts or crevices for virtually no maintenance

Contents

Overview of the Rosemount 2120 . . . . . page 2
Rosemount 2120 level switch ordering . . . . . page 4
Specifications . . . . . page 8
Product certifications . . . . . page 11
Dimensional drawings . . . . . page 13

Fit and forget

- Once installed, the 2120 is ready to go.
  It needs no calibration and requires minimum installation
- The ‘heartbeat’ LED gives an instant visual indication that the unit is operational
- Functional testing of the instrument and system is easy with a magnetic test point
- You can install, and forget it

Superior performance

- The 2120 is a popular choice for high and low level alarm and pump control duties for its simplicity, ease of use, and reliability
- Functionality is virtually unaffected by flow, turbulence, bubbles, foam, or vibration
- The ‘Fast Drip’ design allows the liquid to be quickly drawn away from the fork tip when mounted horizontally, making the 2120 quicker and more responsive in high density or viscous liquid applications
- With a user-selectable time delay feature, the risk of false switching is minimized in turbulent or splashing applications

Applications

- Overfill protection
- High and low level alarms
- Pump control or limit detection
- Run dry or pump protection
- Hygienic applications
- High-temperature applications
- Wireless applications

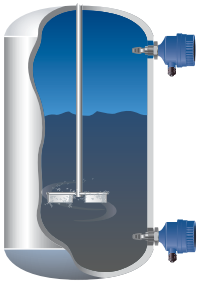

High And Low Level Alarm



High-temperature Applications

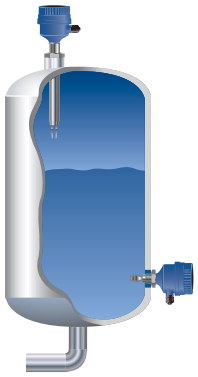

Pump Control / Limit Detection

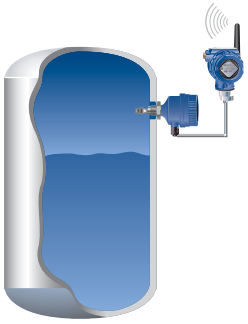

Wireless Applications using a Rosemount 702 Discrete Transmitter

Rosemount 2120 level switch ordering

Table 1. 2120 ordering information

★The Standard offering represents the most common models and options. These options should be selected for best delivery.
The Expanded offering is manufactured after receipt of order and is subject to additional delivery lead time.

Model	Product Description	
2120	Vibrating Fork Liquid Level Switch / –40…302 °F (–40…150 °C)	
Materials of Construction: Process Connection/Fork		
Standard		**Standard**
D	316/316L Stainless Steel (1.4401/1.4404) dual certified	★
Expanded		
F(1)	ECTFE/PFA copolymer, coated 316/316L SST (1.4401/1.4404)	
C(2)	Alloy C (UNS N10002), Alloy C-276 (UNS N10276), Solid	
Process Connection Size / Type		
Standard		**Standard**
0A	3/4-in. BSPT (R) Thread	★
0B	3/4-in. BSPP (G) Thread	★
0D	3/4-in. NPT Thread	★
1A	1-in. BSPT (R) Thread	★
1B	1-in. BSPP (G) Thread	★
1D	1-in. NPT Thread – **(2-in. NPT Thread available by adding "R2105" to the model number(3))**	★
1P	1-in. BSPP (G), O-ring, Hygienic Fitting	★
5R	1 1/2-in. (38 mm) Tri-Clamp, Hygienic Fitting	★
2R	2-in. (51 mm) Tri-Clamp, Hygienic Fitting	★
1G	1-in. ASME B16.5 Class 150 Raised Face (RF) Flange	★
1H	1-in. ASME B16.5 Class 300 Raised Face (RF) Flange	★
1J	1-in. ASME B16.5 Class 600 Raised Face (RF) Flange	★
5G	1 1/2-in. ASME B16.5 Class 150 Raised Face (RF) Flange	★
5H	1 1/2-in. ASME B16.5 Class 300 Raised Face (RF) Flange	★
2G	2-in. ASME B16.5 Class 150 Raised Face (RF) Flange	★
2H	2-in. ASME B16.5 Class 300 Raised Face (RF) Flange	★
3G	3-in. ASME B16.5 Class 150 Raised Face (RF) Flange	★
3H	3-in. ASME B16.5 Class 300 Raised Face (RF) Flange	★
4G	4-in. ASME B16.5 Class 150 Raised Face (RF) Flange	★
4H	4-in. ASME B16.5 Class 300 Raised Face (RF) Flange	★
1K	DN25, EN1092 PN 10/16 Flange	★
1L	DN25, EN1092 PN 25/40 Flange	★
1M	DN25, EN1092 PN 63 Flange	★
1N	DN25, EN1092 PN 100 Flange	★
5K	DN40, EN1092 PN 10/16 Flange	★
5L	DN40, EN1092 PN 25/40 Flange	★
2K	DN50, EN1092 PN 10/16 Flange	★
2L	DN50, EN1092 PN 25/40 Flange	★
7K	DN65, EN1092 PN 10/16 Flange	★
7L	DN65, EN1092 PN 25/40 Flange	★
3K	DN80, EN1092 PN 10/16 Flange	★
3L	DN80, EN1092 PN 25/40 Flange	★
4K	DN100, EN1092 PN 10/16 Flange	★
4L	DN100, EN1092 PN 25/40 Flange	★
Expanded		
5J	1 1/2-in. ASME B16.5 Class 600 Raised Face (RF) Flange	
2J	2-in. ASME B16.5 Class 600 Raised Face (RF) Flange	
3J	3-in. ASME B16.5 Class 600 Raised Face (RF) Flange	

Table 1. 2120 ordering information

★The Standard offering represents the most common models and options. These options should be selected for best delivery.
The Expanded offering is manufactured after receipt of order and is subject to additional delivery lead time.

4J	4-in. ASME B16.5 Class 600 Raised Face (RF) Flange			
5M	DN40, EN1092 PN 63 Flange			
5N	DN40, EN1092 PN 100 Flange			
2M	DN50, EN1092 PN 63 Flange			
2N	DN50, EN1092 PN 100 Flange			
7M	DN65, EN1092 PN 63 Flange			
7N	DN65, EN1092 PN 100 Flange			
3M	DN80, EN1092 PN 63 Flange			
3N	DN80, EN1092 PN 100 Flange			
4M	DN100, EN1092 PN 63 Flange			
4N	DN100, EN1092 PN 100 Flange			
SA	25A, 10K, JIS B2220 Flange			
SB	25A, 20K, JIS B2220 Flange			
TA	40A, 10K, JIS B2220 Flange			
TB	40A, 20K, JIS B2220 Flange			
UA	50A, 10K, JIS B2220 Flange			
UB	50A, 20K, JIS B2220 Flange			
VA	80A, 10K, JIS B2220 Flange			
VB	80A, 20K, JIS B2220 Flange			
ZA	100A, 10K, JIS B2220 Flange			
ZB	100A, 20K, JIS B2220 Flange			
XX[4]	Customer Specific			
Electronic Type			**Available Certifications**	
Standard				**Standard**
T	Direct load switching (Mains 2-wire) 20 to 264 Vac 50/60Hz, 20 to 60 Vdc		NA, E1, E2, E5, E6, E7, G5, G6	★
G	PNP/PLC low voltage (3-wire) 20 to 60 Vdc		NA, E1, E2, E5, E6, E7, G5, G6	★
V	Relay DPCO – **(9…30 Vdc version available by adding "R2257" to model number[3][5])**		NA, E1, E2, E5, E6, E7, G5, G6	★
K	NAMUR		All	★
H	8/16 mA		All	★
Surface Finish			**Available Connections**	
Standard				**Standard**
1	Standard surface finish		All	★
2	Hand polished (Ra < 0.4 μm)		Hygienic Connection Only	★
Product Certifications		**Electronic Types Allowed**	**Available Housings**	
Standard				**Standard**
NA	No Hazardous Locations Certifications	All except 9…30 Vdc Relay	All	★
G5[6]	FM Ordinary Locations (unclassified, safe area)	All	Y, T	★
G6[7]	CSA Ordinary Locations (unclassified, safe area)	All except 9…30 Vdc Relay	Y, T	★
E1	ATEX Flameproof	All except 9…30 Vdc Relay	X, S	★
E2	INMETRO Flameproof	All except 9…30 Vdc Relay	X, S	★
E5[6]	FM Explosion-proof	All	Y, T	★
E6[7]	CSA Explosion-proof	All except 9…30 Vdc Relay	Y, T	★
E7	IECEx Explosion-proof	All except 9…30 Vdc Relay	X, S	★
I1	ATEX Intrinsic Safety	K, H	All	★
I2	INMETRO Intrinsic Safety	K, H	All	★
I5	FM Intrinsic Safety	K, H	All	★
I6	CSA Intrinsically Safe	K, H	All	★
I7	IECEx Intrinsic Safety	K, H	All	★

Table 1. 2120 ordering information

★The Standard offering represents the most common models and options. These options should be selected for best delivery.
The Expanded offering is manufactured after receipt of order and is subject to additional delivery lead time.

Housing		**Available for Certifications**	
Standard			**Standard**
A	Glass Filled Nylon, M20 conduits/cable threads	NA, I1, I2, I5, I6, I7	★
D	Glass Filled Nylon, 1/2-in. NPT conduits/cable threads	NA, I1, I2, I5, I6, I7	★
X	Aluminum Alloy, M20 conduits/cable threads	All except G5, G6, E5, E6	★
Y	Aluminum Alloy, 3/4-in. NPT conduits/cable threads	All except E1, E2, and E7	★
S	Stainless Steel, M20 conduits/cable threads	All except G5, G6, E5, E6	★
T	Stainless Steel 3/4-in. NPT conduits/cable threads	All except E1, E2, and E7	★
Fork Length		**Available Connection**	
Standard			**Standard**
A	Standard length 1.7 in. (44 mm)	All except flanged and 2-in. NPT	★
H(8)	Standard length flange 4.0 in. (102 mm)	All flanged models	★
E(9)	Extended, customer specified length in tenths of inches	All except 1-in. BSPP O-ring (1P)	★
M(9)	Extended, customer specified length in millimeters	All except 1-in. BSPP O-ring (1P)	★
Specific Extended Fork Length			
Standard			**Standard**
0000	Factory default length (only if Fork Length A or H is selected)		★
XXXX(9)	Specific customer specified length in tenths of inches, or millimeters (XXXX mm or XXX.X inches)		★
OPTIONS			
Calibration Data Certification			
Standard			**Standard**
Q4	Certificate of functional test		★
Material Traceability Certification			
Standard			**Standard**
Q8(8)(10)	Material traceability certification per EN 10204 3.1		★
Material Certification			
Standard			**Standard**
Q15(8)(10)	NACE MR0175 / ISO 15156		★
Q25(8)(10)	NACE MR0103		★
Special Procedures			
Standard			**Standard**
P1(11)	Hydrostatic testing with certificate		★
Typical Model Number: 2120 D 0A K 1 I1 A 0000 Q8			

(1) ECTFE/PFA copolymer coating is only available for a flanged 2120 but excludes 1-in./DN25/25A flanges. Flanges are dual certified 316 and 316L Stainless Steel (1.4401 and 1.4404).

(2) Available for threaded process connection codes 0A, 0D, 1A, and 1D and flanged process connections as standard, other upon request.

(3) For a combination of 2-in. threaded process connection and 9 to 30 Vdc (12 Vdc nominal) version of the Relay electronics, add "R2258" to the model code.

(4) Other process connections available upon request.

(5) The 9 to 30 Vdc (12 Vdc nominal) version of the Relay electronics is available with Product Certification codes G5 or E5.

(6) See "Product certifications" on page 11. E5 includes G5 requirements. G5 is for use in unclassified, safe area locations only.

(7) See Product Certifications on page page 11. E6 includes G6 requirements. G6 is for use in unclassified, safe area locations only.

(8) Not available for hand polished wet side.

(9) Minimum length available for 3/4-in. threaded connection is 3.8 in. (95 mm); for 1-in. and 2-in. threaded, it is 3.7 in. (94 mm); for flanged, it is 3.5 in. (89 mm); and for Tri-Clamp, it is 4.1 in. (105 mm). Maximum length is 157.5 in. (4000 mm), except for ECTFE/PFA copolymer coating and hand-polished process where the maximum length is 59.1 in. (1500 mm) and 39.4 in. (1000 mm) respectively. Examples: Code E1181 is 118.1 inches. Code M3000 is 3000 millimeters.

(10) Only available for wetted parts.

(11) Option limited to units with extended lengths up to 59.1-in. (1500 mm). Option is not available for ECTFE/PFA coating.

Spare parts and accessories

Table 2. Spare parts and accessories

★The Standard offering represents the most common models and options. These options should be selected for best delivery.
The Expanded offering is manufactured after receipt of order and is subject to additional delivery lead time.

Spares and Accessories [1] [2]		
Standard		**Standard**
02100-1000-0001	Seal for 1-in. BSPP (G1A). Material: Non-asbestos BS7531 grade X carbon fiber with rubber binder	★
02100-1040-0001	Seal for 3/4-in. BSPP (G3/4A). Material: Non-asbestos BS7531 grade X carbon fiber with rubber binder	★
02100-1010-0001	Hygienic adaptor boss 1-in. BSPP. Material: 316 SST fitting. FPM/FKM O-ring	★
02100-1020-0001	2-in. (51 mm) Tri-clamp kit (vessel fitting, clamp ring, and seal). Material: 316 SST, NBR Nitrile	★
02100-1030-0001	Telescopic test magnet	★
02120-2000-0001[3]	1 1/2-in. BSPP adjustable 316 SST clamp gland for 1-in. extended lengths. Silicone (Si) rubber seal	★
02120-2000-0002[3]	1 1/2-in. NPT adjustable 316 SST clamp gland for 1-in. extended lengths. Silicone (Si) rubber seal	★
02120-7000-0001	Replacement Cassette: Direct load switching (2 Wire) (Red)	★
02120-7000-0002	Replacement Cassette: PNP/PLC, low voltage (Yellow)	★
02120-7000-0003	Replacement Cassette: NAMUR (Light Blue)	★
02120-7000-0004	Replacement Cassette: Relay (DPCO), standard version (Green)	★
02120-7000-0005	Replacement Cassette: 8/16 mA output (Dark Blue)	★
02120-7000-0007	Replacement Cassette: Relay (DPCO), 9...30 Vdc (12 Vdc nominal) version (Green)	★

(1) Check the Electronic Type and Product Certification sections in Table 1 on page 4 for availability conditions.

(2) Intrinsically Safe (IS) approved cassettes can only be replaced with the same type of IS cassette. Non-IS cassette types can be interchanged with other non-IS cassettes, but the new label must be fitted and the original part number transferred to the new label.

(3) The adjustable clamp gland is not explosion-proof.

Specifications

General

Product

- Rosemount 2120 Full-featured Vibrating Fork Liquid Level Switch

Measuring principle

- Vibrating Fork

Applications

- Most liquids including coating liquids, aerated liquids, and slurries

Mechanical

Housing / Enclosure

Table 3. Housing / Enclosure specification

Housing Code	A	D	X	Y	S	T
Housing Material	Nylon PA66 30%GF		Al alloy ASTM B85 A360.0		316C12 SST	
Rotational	Yes		No		No	
Housing Paint	Not Applicable		Polyurethane Paint		Not Applicable	
LED Window	Nylon PA12		None		None	
Conduit Entry	M20	1/2-in. NPT	M20	3/4-in. NPT	M20	3/4-in. NPT
Ingress Protection	IP66/67 to EN60529		IP66/67 to EN60529, NEMA 4X		IP66/67 to EN60529, NEMA 4X	

Connections

- Threaded, hygienic, and flanged process connections.
  See **"Process Connection Size / Type"** on page 4 for a complete list

Extended lengths

- The maximum extended length is 157.5 in. (4000 mm) except for ECTFE/PFA copolymer coating and hand-polished process connection options which have a maximum length of 59.1 in. (1500 mm) and 39.4 in. (1000 mm) respectively

Table 4. Minimum extended lengths

Process Connection	Minimum Extended Length
3/4–in. Threaded	3.8 in. (95 mm)
1–in. and 2-in. Threaded	3.7 in. (94 mm)
Flanged	3.5 in. (89 mm)
Tri-Clamp	4.1 in. (105 mm)

Process connection materials

- 316/316L Stainless Steel (1.4401/1.4404 dual certified)
- Alloy C (UNS N10002) and Alloy C-276 (UNS N10276)
  – available for flanged, and BSPT and NPT threaded process connections (3/4-in. and 1-in. BSPT (R), and 3/4-in. and 1-in. NPT)
- ECTFE/PFA co-polymer coated 316/316L Stainless Steel (1.4401/1.4404 dual certified)
  – only available for a flanged 2120 but excludes 1-in./DN25/25A flanges
- Hand-polished to better than 0.4 µm option for hygienic connections
- Gasket material for 3/4-in. and 1-in. BSPP (G) is non-asbestos BS7531 Grade X carbon fiber with rubber binder

Dimensional drawings

- See "Dimensional drawings" on page 13

Performance

Hysteresis (water)

- ±0.039-in. (±1 mm) nominal

Switching point (water)

- 0.5 in. (13 mm) from tip (vertical) / from edge (horizontal) of fork (this will vary with different liquid densities)

Functional

Maximum operating pressure

- The final rating depends on the selected process connection
- Threaded connection: see Figure 1 for operating pressures
  Note: Clamp glands 02120-2000-0001 and 02120-2000-0002 (page 7) limit the maximum pressure to 18.85 psig (1,3 bar g)
- Hygienic connection: 435 psig (30 bar g)
- Flanged connection:
  See Figure 1 or Table 5 (*whichever gives the lowest pressure*)

Figure 1. Process pressure

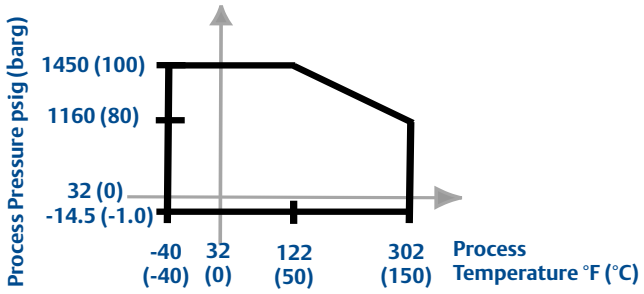

Table 5. Maximum flange pressure rating

Standard	Class/Rating	SST Flanges
ASME B16.5	Class 150	275 psig(1)
ASME B16.5	Class 300	720 psig(1)
ASME B16.5	Class 600	1440 psig(1)
EN1092-1	PN 10	10 barg(2)
EN1092-1	PN 16	16 barg(2)
EN1092-1	PN 25	25 barg(2)
EN1092-1	PN 40	40 barg(2)
EN1092-1	PN 63	63 barg(2)
EN1092-1	PN 100	100 barg(2)
JIS B2220	10K	14 barg(3)
JIS B2220	20K	34 barg(3)

(1) At 100 °F (38 °C), the rating decreases with an increasing process temperature.

(2) At 122 °F (50 °C), the rating decreases with an increasing process temperature.

(3) At 248 °F (120 °C), the rating decreases with an increasing process temperature.

Minimum and maximum operating temperatures

- See Figure 2 for operating temperatures
- Clamp glands 02120-2000-0001 and 02120-2000-0002 (page 7) limit the maximum temperature to 257 °F (125 °C)
- The ambient temperature for a 8/16 mA cassette is limited to 158 °F (70 °C) in dust applications

Figure 2. Operating temperatures

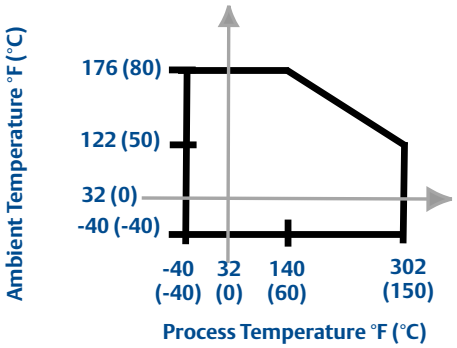

Liquid density requirement

- Minimum 37.5 lb/ft^3 (600 kg/m^3)

Liquid viscosity range

- 0.2 to 10000 cP (centiPose)

Solids content and coating

- Maximum recommended diameter of solid particles in the liquid is 0.2 in. (5 mm)
- For a coating product, avoid bridging of forks

Switching delay

- User selectable 0.3, 1, 3, 10, 30 seconds delay for dry-to-wet and wet-to-dry switching

CIP (Clean In Place) and SIP (Steam In Place) cleaning

- Withstands cleaning routines up to 275 °F (135 °C)

NACE

- NACE compliance to MR0175 / ISO 15156 or MR0103, depending on the option code selected for the model number

Electrical

Switching mode

User selectable switching mode (Dry=on or Wet=on)

Protection

- Polarity insensitive
  – *Relay (except 12 Vdc nominal version) and Direct Load electronics*
- Over-current protection – *Direct Load and PNP/PLC electronics*
- Short-circuit protection – *Direct Load and PNP/PLC electronics*
- Load-missing protection – *Direct Load and PNP/PLC electronics*
- Surge protection (to IEC61326) – *Direct Load and PNP/PLC electronics*

Heartbeat LED

- The 2120 has a status-indicating heartbeat LED, which can be seen at all times and from all angles through a lens in the cover (no lens in metal housings)
- The LED flashes when the output is 'off' and is constantly lit when it is 'on'. The LED gives a constant indication that the 2120 is functioning correctly (different flash rates are used to indicate a product malfunction) and gives a local indication of the process state

Magnetic test point

- A magnetic test point is located on the side of the housing, allowing a functional test of the 2120 and a system connected to it. By holding a magnet to the target, the 2120 output changes state for as long as the magnet is held there

Terminal connection (wire diameter)

- Minimum 26 AWG, Maximum 14 AWG (0.13 to 2.5 mm^2). Note national regulations.

Conduit plugs/cable gland

- Metal housing:
  Conduit entries for explosion-proof areas are shipped with one Exd plug (loose in bag) and two dust caps fitted. Use suitably rated cable glands. Unused conduit entries must be sealed with a suitably rated blanking plug
- Glass-filled nylon housing with direct load, PNP/PLC and IS electronics are shipped with one PA66(1) cable gland and one blanking plug
- Glass-filled nylon housing with relay electronics are shipped with two PA66(1) cable glands

Grounding

- The 2120 must always be grounded either through the terminals or using the external ground connection provided.

(1) Cable diameter 0.2 to 0.3 in. (5 to 8 mm)

Electrical connections

- Direct load switching (mains two wire) cassette.
  Electronic Type code T (see Table 1 on page 4)

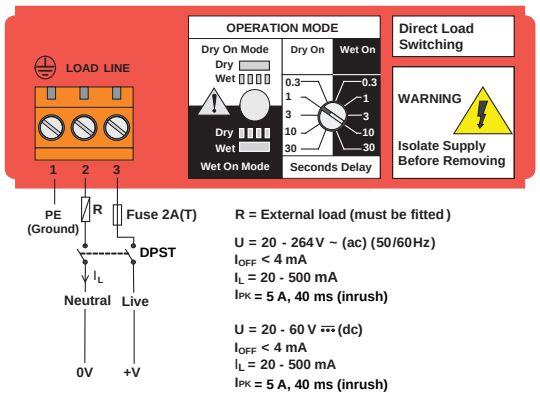

- NAMUR (light blue) cassette.
  Electronic Type code K (see Table 1 on page 4)

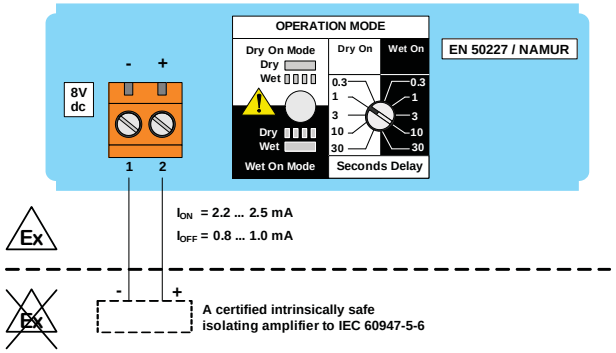

- 8/16 mA (dark blue) cassette.
  Electronic Type code H (see Table 1 on page 4)

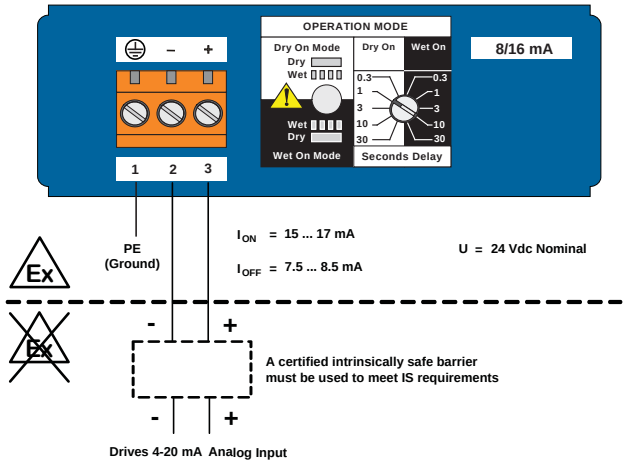

- DPCO dual relay cassette (standard version).
  Electronic Type code V (see Table 1 on page 4)

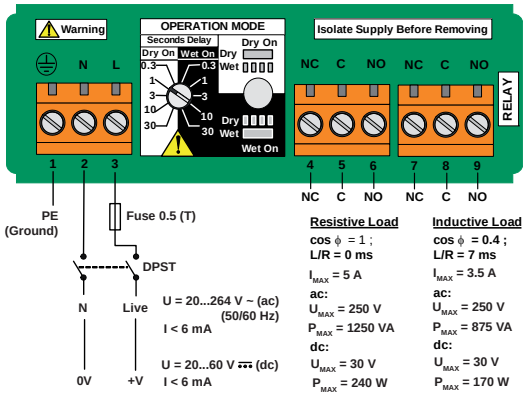

- DPCO dual relay cassette (12 Vdc nominal version).
  Electronic Type code V (see Table 1 on page 4)

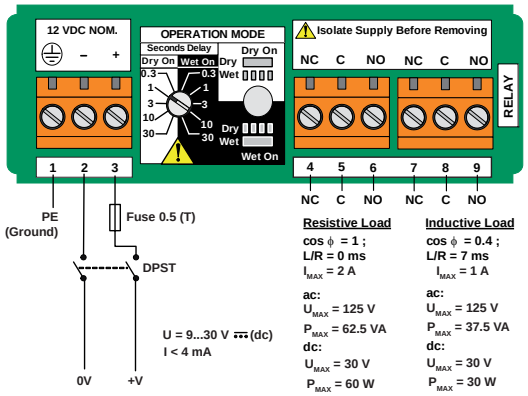

- Solid state PNP output for direct interface to a PLC.
  Electronic Type code G (see Table 1 on page 4)

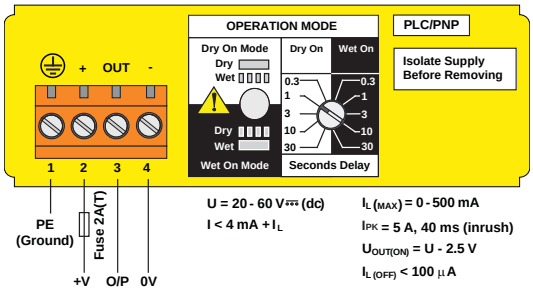

Product certifications

European directive information

The EC declaration of conformity for all applicable European directives for this product can be found on the Rosemount website at www.rosemount.com. A hard copy may be obtained by contacting your local sales office.

ATEX Directive (94/9/EC)

Complies with the ATEX Directive.

Pressure Equipment Directive (PED) (97/23/EC)

The Rosemount 2120 is outside the scope of PED Directive.

L.V. Directive

EN61010-1 Pollution degree 2, Category II (264 V maximum), Pollution degree 2, Category III (150 V maximum)

Electro Magnetic Compatibility (EMC) Directive

EN61326 Emissions to Class B.
Immunity to industrial location requirements.

CE-mark

Complies with applicable directives (EMC, ATEX, and LVD)

Ordinary location certification for FM

G5 Project ID: 3021776

The switch has been examined and tested to determine that the design meets basic electrical, mechanical, and fire protection requirements by FM, a nationally recognized testing laboratory (NRTL) as accredited by the Federal Occupational Safety and Health Administration (OSHA).

Ordinary location certification for CSA

G6 Certificate Number: 06 CSA 1805769

The switch has been examined and tested to determine that the design meets basic electrical, mechanical, and fire protection requirements by CSA, a nationally recognized testing laboratory as accredited by the Standards Council of Canada (SCC). **Single seal**

Canadian Registration Number

CRN 0F04227.2C

NOTE
The requirements of CRN are met when a Rosemount 2120 CSA IS-approved (I6 code) vibrating fork level switch model is configured with 316/316L stainless steel (1.4401/1.4404) wetted parts and either NPT threaded or 2 to 8-in. ASME B16.5 flanged process connections.

Hazardous locations certifications

North american approvals

Factory Mutual (FM) explosion-proof approval

E5 Project ID: 3012658
Explosion-proof for Class I, Div. 1, Groups A, B, C, and D
Temperature Class: T6 (T_{amb} –40 to 75 °C)
Enclosure: Type 4X

Factory Mutual (FM)
intrinsically safe approval and non-incendive

I5 Project ID: 3011456
Intrinsically Safe for Class I, Div. 1, Groups A, B, C, and D
Class I, Zone 0, AEx ia IIC
Non-incendive for Class I, Div. 2, Groups A, B, C, and D
Class I, Zone 2, IIC
Temperature Code: T5 (T_{amb} –40 to 80 °C, Tproc < 80 °C)
Control Drawing: 71097/1154 (*with NAMUR electronics*)
Control Drawing: 71097/1314 (*with 8/16 mA electronics*)

NOTE
A certified isolating amplifier or barrier must be used for intrinsic safety.

Canadian approvals

Canadian Standards Association (CSA) explosion-proof

E6 Project ID: 1786345
Explosion-proof for Class I, Div. 1, Groups A, B, C, and D
Temperature Class: T6 (T_{amb} –40 to 75 °C)
Enclosure: Type 4X
Single seal

Canadian Standards Association (CSA)
intrinsically safe and non-incendive

I6 Certificate Number: 06 CSA 1786345
Intrinsically Safe for Class I, Div. 1, Groups A, B, C, and D
Class 1, Zone 0, Ex ia IIC
Non-Incendive for Class I, Div. 2, Groups A, B, C, and D
Temperature Code: T5 (T_{amb} –40 to 80 °C, Tproc < 80 °C)
Control Drawing: 71097/1179 (*with NAMUR electronics*)
Control Drawing: 71097/1315 (*with 8/16 mA electronics*)
Single seal

NOTE
A certified isolating amplifier or barrier must be used for intrinsic safety.

European approvals

ATEX flameproof approval

E1 Certificate: Sira 05ATEX1129X
Flameproof and Dust:
ATEX Marking ⟨Ex⟩ II 1/2 G D
Ex d IIC T6...T2 Ga/Gb
Ex tb IIIC T85 °C...T265 °C Db

ATEX intrinsically safe approval

I1 Certificate: Sira 05ATEX2130X
Intrinsic Safety and Dust:
ATEX Marking ⟨Ex⟩ II 1 G D
Ex ia IIC T5...T2 Ga
Ex ia IIIC T85 °C...T265 °C Da

NOTE
A certified isolating amplifier or barrier must be used for intrinsic safety.

International approvals

INMETRO flameproof approval

E2 Certificate Number: TÜV 12.1285 X
Flameproof and Dust:
Ex d IIC T6 to T2 Gb, Ex tb IIIC T85 °C to T265 °C Db
Ex d IIC T6 to T2 Ga/Gb, Ex tb IIIC T85 °C to T265 °C Db

INMETRO intrinsically safe approval

I2 Certificate Number: TÜV 12.1391 X
Intrinsically Safe and Dust:
Ex ia IIC T* Ga, Ex ia IIIC T* Da (* See table in the certificate)
Ta* (* See table in the certificate)

Security parameters:

NAMUR:
Ui = 15 V / Ii = 32 mA / Pi = 0,1 W / Ci = 12 nF / Li = 0,06 mH

8/16 mA:
Ui = 30 V / Ii = 93 mA / Pi = 0,65 W / Ci = 12 nF / Li = 0,035 mH

Safe use special condition:

Non-metallic parts of the equipment casing can generate electrostatic charges under extreme conditions. The equipment should only be cleaned with a damp cloth.

NOTE
A certified isolating amplifier or barrier must be used for intrinsic safety.

International Electrotechnical Commission (IEC) flameproof approval

E7 Certificate: IECEx SIR 06.0051X
Flameproof and Dust:
Ex d IIC T6...T2 Ga/Gb
Ex tb IIIC T85°C...T265°C Db

International Electrotechnical Commission (IEC) intrinsically safe approval

I7 Certificate: IECEx SIR 06.0070X
Intrinsically Safe and Dust:
Ex ia IIC T5...T2 Ga
Ex ia IIIC T85 °C...T265 °C Da

NOTE
A certified isolating amplifier or barrier must be used for intrinsic safety.

Dimensional drawings

3/4 and 1-in. threaded mounting (standard length) . . . . . page 13
3/4 and 1-in. thread mounting (extended length) . . . . . page 14
2-in. thread mounting . . . . . page 15
Flange mounting (standard length) . . . . . page 16
Flange mounting (extended length) . . . . . page 17

3/4 and 1-in. threaded mounting (standard length)

Note: Dimensions are in inches (millimeters)

GLASS-FILLED NYLON HOUSING

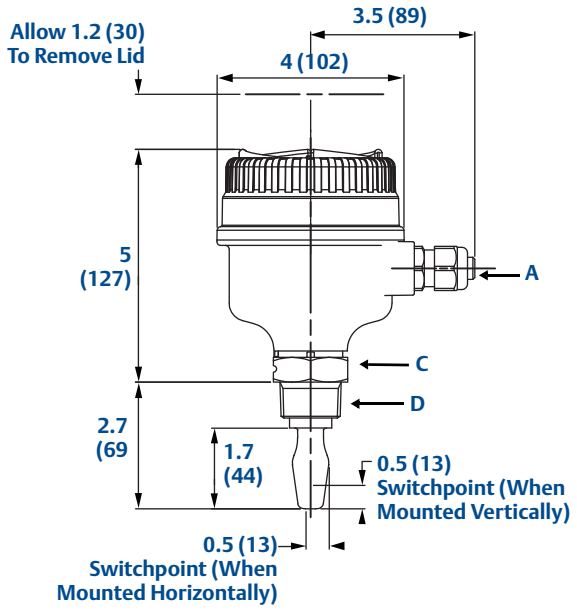

ALUMINUM/SST HOUSING

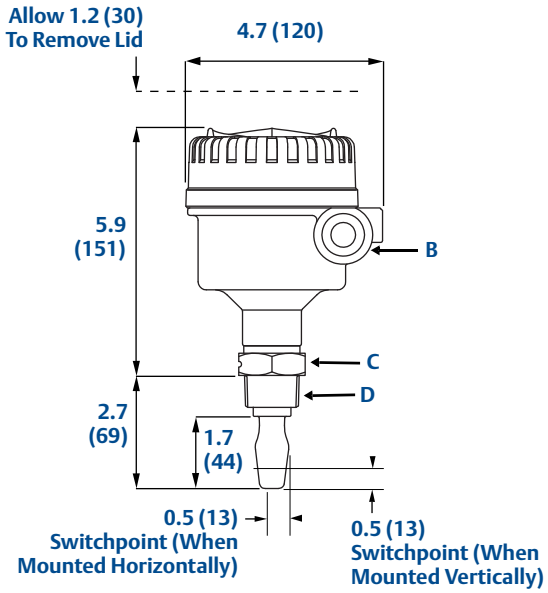

NOTE: FOR HYGIENIC 2120 DIMENSIONS, SEE TYPE 1 DRAWING DOWNLOADS ON WEB SITE

A. Cable Entry M20x1.5 or 1/2-in. NPT
B. Cable Entry M20x1.5 or 3/4-in. NPT
C. 1.6 (40) A/F Hexagon
D. 3/4-in. or 1-in. Thread

3/4 and 1-in. thread mounting (extended length)

Note: Dimensions are in inches (millimeters)

GLASS-FILLED NYLON HOUSING

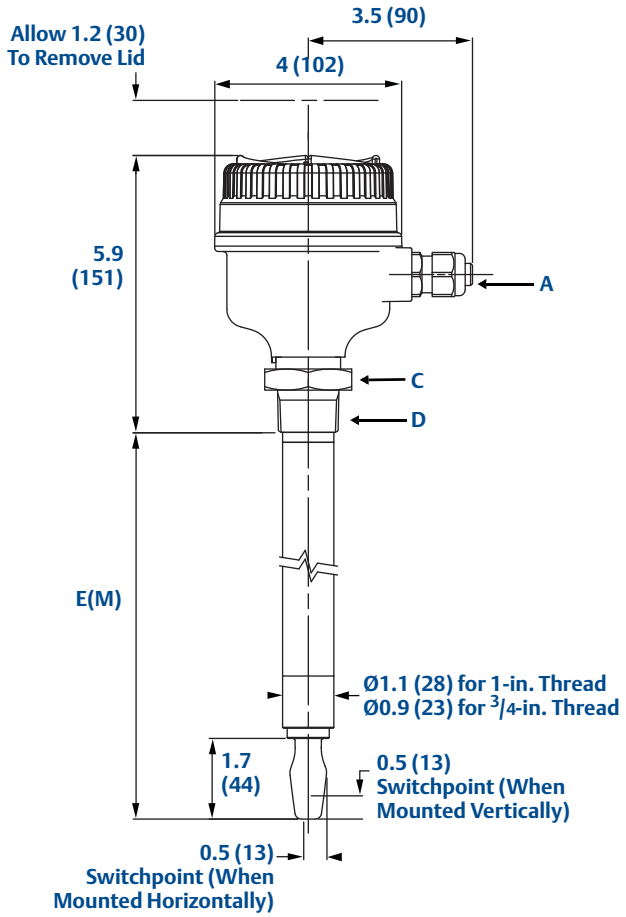

ALUMINUM/SST HOUSING

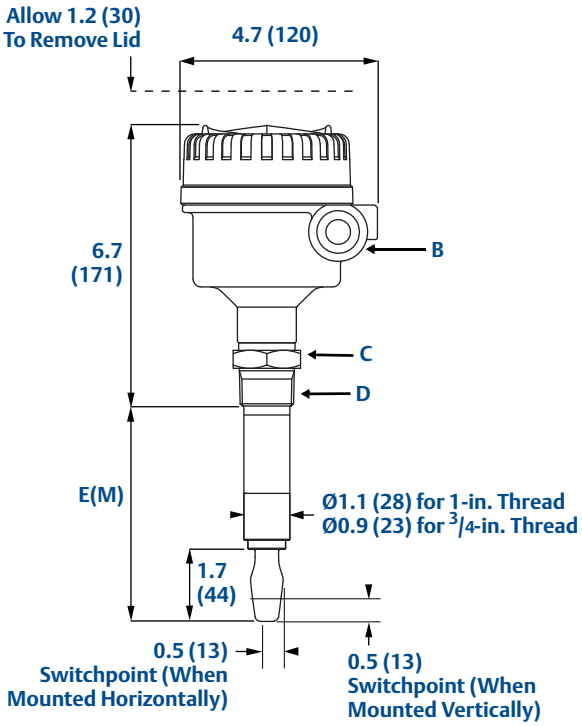

NOTE: FOR HYGIENIC 2120 DIMENSIONS, SEE TYPE 1 DRAWING DOWNLOADS ON WEB SITE

A. Cable Entry M20x1.5 or 1/2-in. NPT
B. Cable Entry M20x1.5 or 3/4-in. NPT
C. 1.6 (40) A/F Hexagon
D. 3/4-in. or 1-in. Thread

Table 6. Fork length for 3/4 and 1-in. threaded 2120

Process Connection	Standard Length Fork Length Code A	Minimum Length Fork Length Code E (M)	Maximum Length Fork Length Code E (M)(1)
3/4-in. Thread	1.7 in. (44 mm)	3.75 in. (95 mm)	157.5 in. (4000 mm)
1-in. Thread	1.7 in. (44 mm)	3.74 in. (94 mm)	157.5 in. (4000 mm)

(1) Maximum extended length of fork with hand-polished option is 39.4 in. (1000 mm).

2-in. thread mounting

Note: Dimensions are in inches (millimeters)

GLASS-FILLED NYLON HOUSING

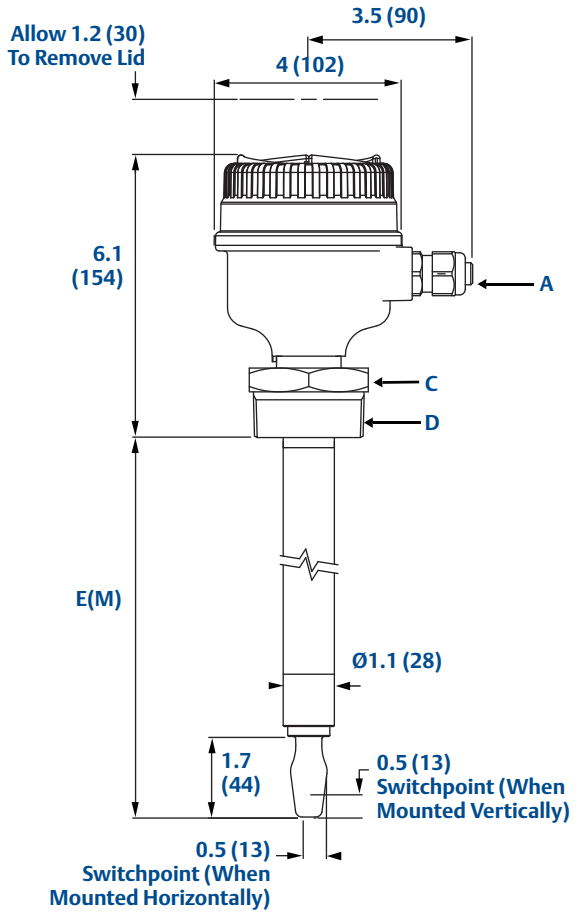

ALUMINUM/SST HOUSING

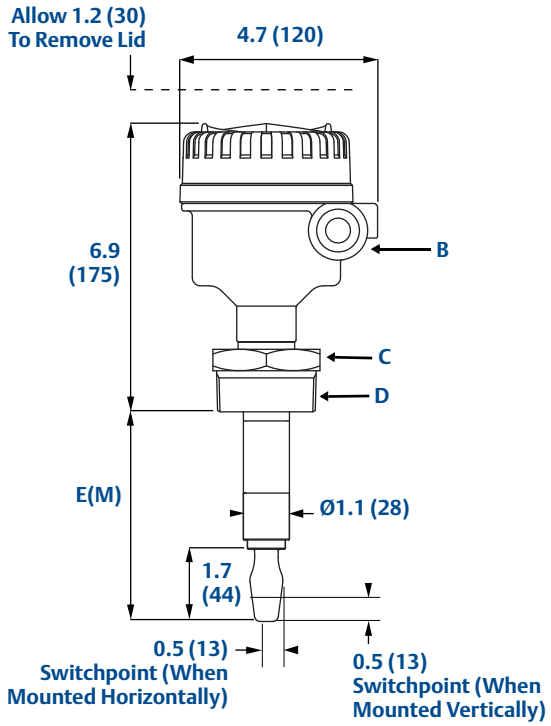

A. Cable Entry M20x1.5 or $^{1}/_{2}$-in. NPT
B. Cable Entry M20x1.5 or $^{3}/_{4}$-in. NPT
C. 2.6 (65) A/F Hexagon
D. 2-in. Thread

Table 7. Fork length for 2-in. threaded 2120

Process Connection	Minimum Length Fork Length Code E (M)	Maximum Length Fork Length Code E (M)
2-in. Thread	3.74 in. (94 mm)	157.5 in. (4000 mm)

Flange mounting (standard length)

Note: Dimensions are in inches (millimeters)

GLASS-FILLED NYLON HOUSING

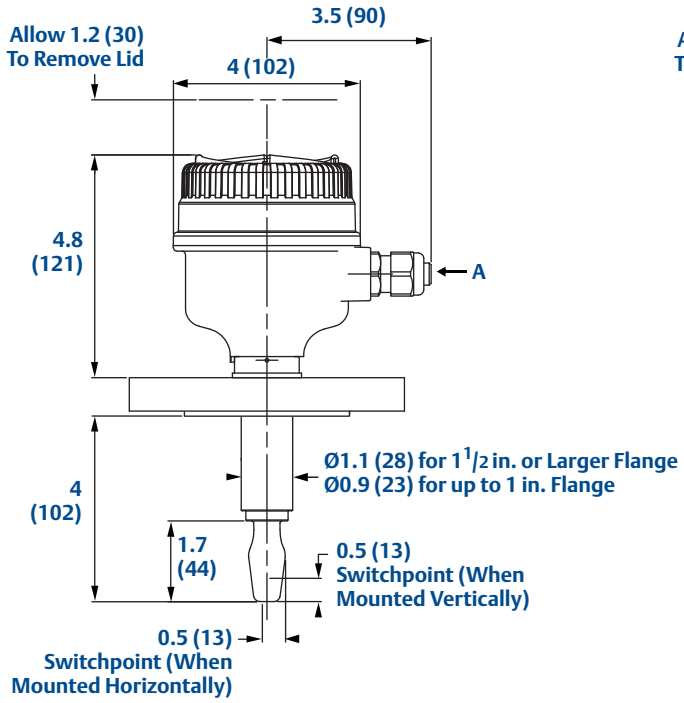

ALUMINUM/SST HOUSING

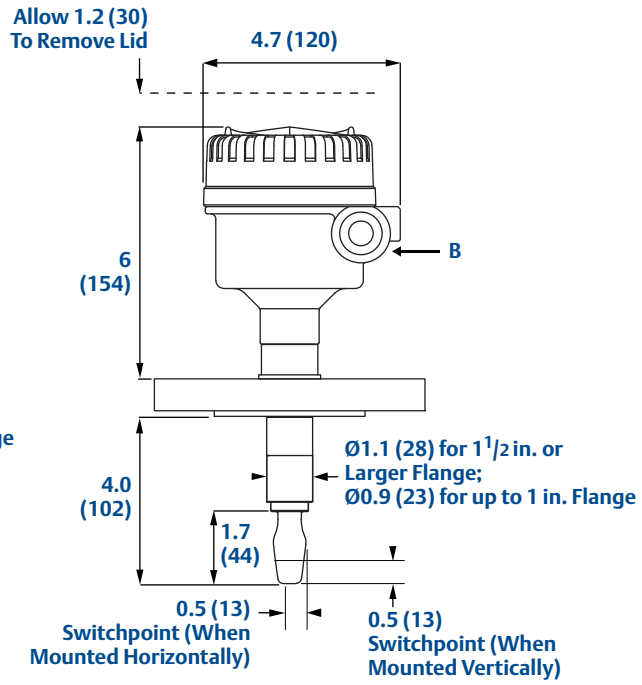

A. Cable Entry M20x1.5 or 1/2-in. NPT
B. Cable Entry M20x1.5 or 3/4-in. NPT

Flange mounting (extended length)

Note: Dimensions are in inches (millimeters)

GLASS-FILLED NYLON HOUSING

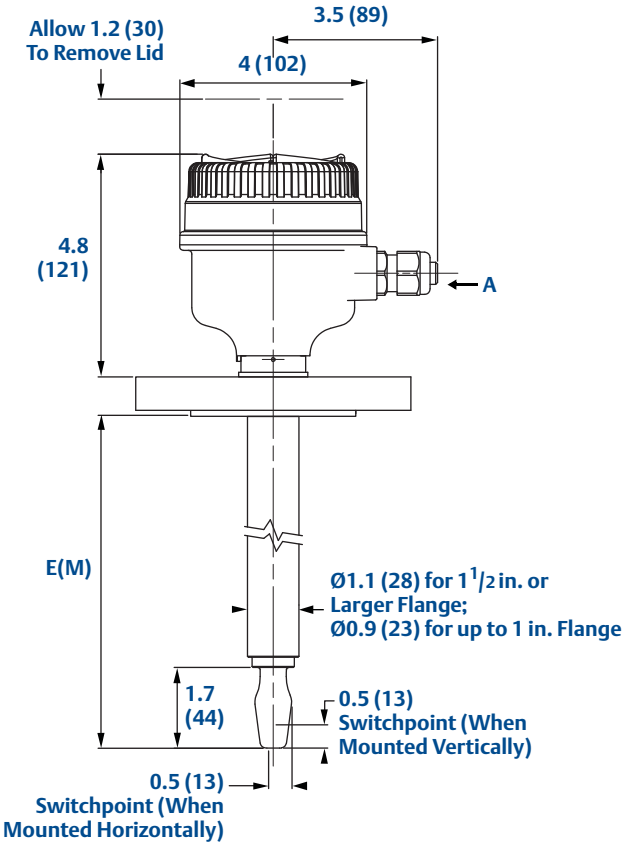

ALUMINUM/SST HOUSING

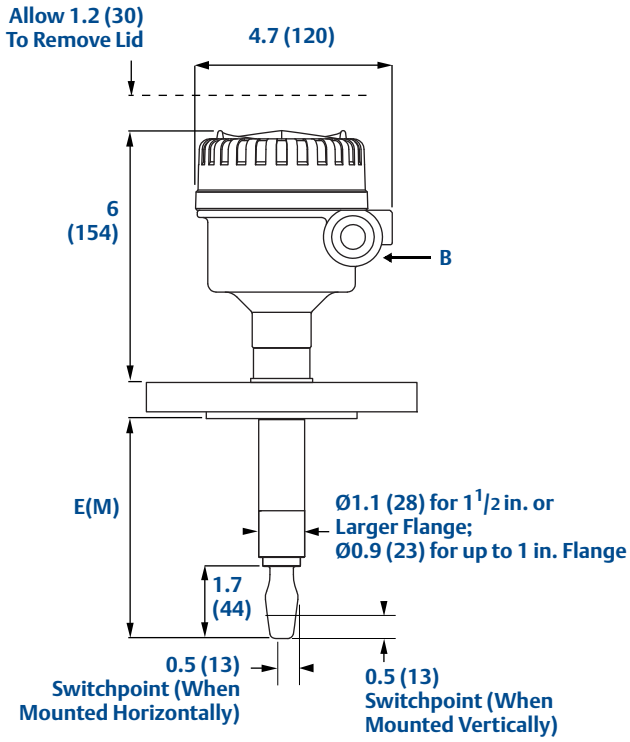

A. Cable Entry M20x1.5 or 1/2-in. NPT
B. Cable Entry M20x1.5 or 3/4-in. NPT

Table 8. Fork length for flanged 2120

Process Connection Material	Standard Length Model Code H	Minimum Length Model Code E (M)	Maximum Length Model Code E (M)
Stainless steel(1)	4 (102)	3.5 (89)	157.5 (4000)
ECTFE/PFA co-polymer coated	4 (102)	3.5 (89)	59.1 (1500)
Alloy C and Alloy C-276	4 (102)	3.5 (89)	157.5 (4000)

(1) Maximum extended length of fork with hand-polished option is 39.4 in. (1000 mm).

Emerson Process Management
Rosemount Inc.
8200 Market Boulevard
Chanhassen, MN 55317 USA
T (U.S.) 1-800-999-9307
T (International) (952) 906-8888
F (952) 906-8889
www.rosemount.com

Emerson Process Management
Blegistrasse 23
P.O. Box 1046
CH 6341 Baar
Switzerland
T +41 (0) 41 768 6111
F +41 (0) 41 768 6300
www.rosemount.com

Emerson Process Management
Asia Pacific Pte Ltd
1 Pandan Crescent
Signapore 128461
T +65 6777 8211
F +65 6777 0947
Service Support Hotline: +65 6770 8711
Email: Enquiries@AP.EmersonProcess.com
www.rosemount.com

Emerson Process Management
Latin America
1300 Concord Terrace, Suite 400
Sunrise Florida 33323 USA
T + 1 954 846 5030
www.rosemount.com

Standard Terms and Conditions of Sale can be found at www.rosemount.com\terms_of_sale
The Emerson logo is a trade mark and service mark of Emerson Electric Co.
Rosemount and the Rosemount logotype are registered trademarks of Rosemount Inc.
PlantWeb is a registered trademark of one of the Emerson Process Management group of companies.
HART and WirelessHART are registered trademarks of the HART Communication Foundation
All other marks are the property of their respective owners.
© 2013 Rosemount Inc. All rights reserved.

ROSEMOUNT®

EMERSON™
Process Management