UIT514

Ultrasonic sensor

UIA06000F2KG/US

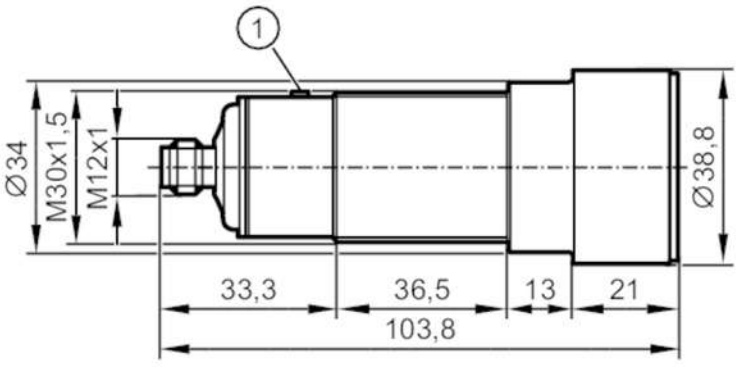

1 teach button

Product characteristics		
Electrical design		NPN
Output function		normally open / normally closed; (parameterisable)
Sensing range	[mm]	350...6000; (Target: 400 x 400 mm)
Housing		threaded type
Dimensions	[mm]	M30 x 1.5 / L = 103.8
Electrical data		
Operating voltage	[V]	10...30 DC
Current consumption	[mA]	< 30
Protection class		III
Reverse polarity protection		yes
Power-on delay time	[s]	< 0.3
Converter frequency	[kHz]	75
Inputs / outputs		
Number of inputs and outputs		Number of digital outputs: 1; Number of analogue outputs: 1
Outputs		
Total number of outputs		2
Output signal		switching signal; analogue signal
Electrical design		NPN
Number of digital outputs		1
Output function		normally open / normally closed; (parameterisable)
Max. voltage drop switching output DC	[V]	2.2
Permanent current rating of switching output DC	[mA]	100
Switching frequency DC	[Hz]	1
Number of analogue outputs		1
Analogue voltage output	[V]	0...10
Min. load resistance	[Ω]	3000
Short-circuit protection		yes

UIT514

Ultrasonic sensor

UIA06000F2KG/US

Overload protection		yes	
Detection zone			
Sensing range	[mm]	350...6000; (Target: 400 x 400 mm)	
Blind zone	[mm]	350	
Angle of aperture cylindrical	[°]	15; (±2)	
Max. deviation from the 90° angle sensor/object	[°]	± 4	
Accuracy / deviations			
Temperature compensation		yes	
Hysteresis	[%]	1	
Switch point drift	[%]	-5...5	
Linearity error of analogue output	[%]	<3	
Repeatability		1 %	
Resolution	[mm]	3	
Notes on the accuracy / deviation		The indicated values are reached after a warm-up time of min. 20 minutes	
Response times			
Response time	[ms]	< 600; (analogue output)	
Operating conditions			
Ambient temperature	[°C]	-20...70	
Storage temperature	[°C]	-30...80	
Protection		IP 67	
Tests / approvals			
EMC		EN 61000-4-2 ESD	4 kV CD / 8 kV AD
		EN 61000-4-3 HF radiated	3 V/m
		EN 61000-4-4 Burst	2 kV
		EN 61000-4-6 HF conducted	3 V
		EN 55011	Class A
Vibration resistance		EN 60068-2-6 Fc	(10-55) Hz 1 mm amplitude, oscillation period 5 min., 30 min. per axis at resonance or 55 Hz
Shock resistance		EN 60068-2-27 Ea	30 g 11 ms half-sine; 3 shocks each in every direction of the 3 coordinate axes
MTTF	[years]	114	
UL approval		Ta	-20...70 °C
		power supply	Class 2
		File number UL	E174191
Mechanical data			
Weight	[g]	242	
Housing		threaded type	
Dimensions	[mm]	M30 x 1.5 / L = 103.8	
Thread designation		M30 x 1.5	
Materials		stainless steel (316L/1.4404); PA; epoxy glass ceramics	
Tightening torque	[Nm]	100	

UIT514

Ultrasonic sensor

UIA06000F2KG/US

Displays / operating elements		
Display	switching status	2 x LED, yellow
	echo	1 x LED, green
Teach function	yes	

Accessories	
Items supplied	lock nuts: 2, stainless steel

Remarks	
Remarks	operating voltage "supply class 2" according to cULus
Pack quantity	1 pcs.

Electrical connection

Connector: 1 x M12; coding: A



Connection

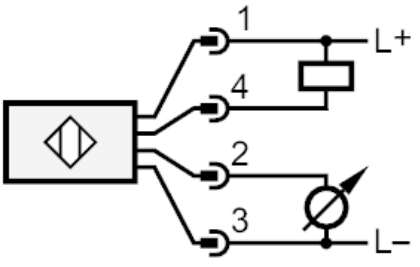

UIT514

Ultrasonic sensor

UIA06000F2KG/US

Diagrams and graphs

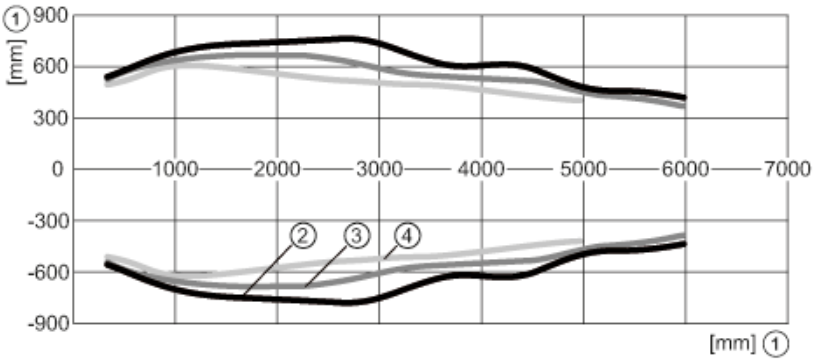

1 distance

2 Standard sound beam

3 Medium sound beam

4 Narrow sound beam