

PIN OUT

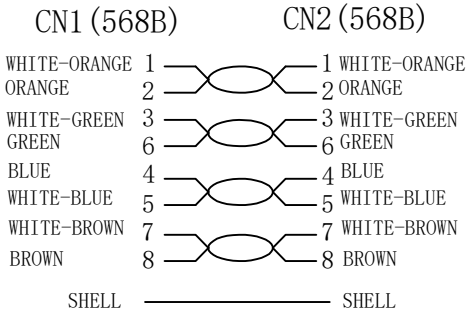

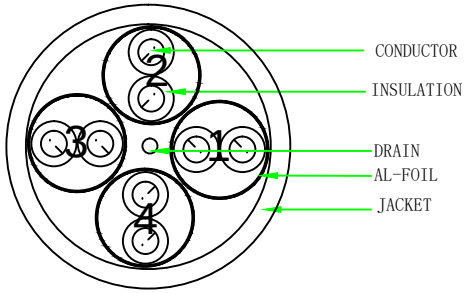

NOTE:

1. Fluke Channel Test ISO 11801 channel Class Ea
2. RoHS2.0 AND REACH compliant
3. Electrical test:100% open short & miss wire test;
4. OPERATING TEMPERATURE:-10℃ ~ 60℃
5. Print word: CAT7 U/FTP 4x2x32AWG/7 LSZH ISO11801 & EN50173 & ANSI/TIA568C.2

ITEM No.	LENGTH
21.15.1710	500±30mm
21.15.1711	1000±30mm
21.15.1714	1500±50mm
21.15.1712	2000±50mm
21.15.1713	3000±70mm
21.15.1715	5000±70mm

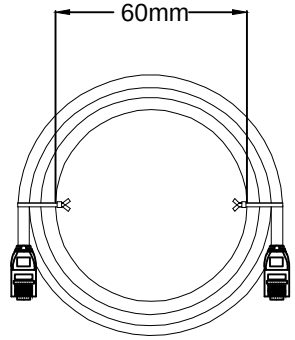

MATERIAL LIST

NO.	PARTS NAME	SPECIFICATION STANDARD	QT'Y	REMARK
③	CABLE	CAT.7 U/FTP (32AWG BC*1P+AL-FOIL)*4+DRAIN+ JACKET:LSZH/WHITE,OD:3.6±0.2mm	1	
②	Over mold	PVC/WHITE	2	
①	Plug	RJ45 8P8C Short Shielded Plug,Pin Gold Plated 3u″, The Shell Nickel plating,Transparent	2	

BY	CHK	REVISION RECORD MODIFICATIONS	DATE	REV.
		NEW	2018-07-20	A

DESC.	ROLINE Cat. 7 U/FTP Cable, LSOH, Slim, White

SECOMP