6.3x25mm fused terminal blocks

Product overview

- 2 or 3 pole terminal block
- Accepts 5x20mm and 6.3x25mm (1"x$^{1}/_{4}$") fuses
- Anti rotation spigot
- IP20 finger protection
- Cable entry 3x1.5mm^2 or 2x2.5mm^2
- 16mm fixing pitch
- 2 pole supplied in 3 pole housing
- 3 pole supplied complete with fixing screw and washer
- CE approved

CMFTB



SPECIFICATION	
Rating	Fuseholder 250V AC Terminal 450V AC
Current rating	Fuseholder 13A Terminal 20A
Moulding	UL94-V0 flame retardant PA
Terminal	Brass, nickel plated
Fuse clip	Phosphor bronze
Temperature	-20°C to 125°C
Fuse size	5x20mm glass or ceramic 6.3x25mm glass or ceramic
Screws	Steel zinc plated M3.6
GWIT	775°C
GWFI	850°C

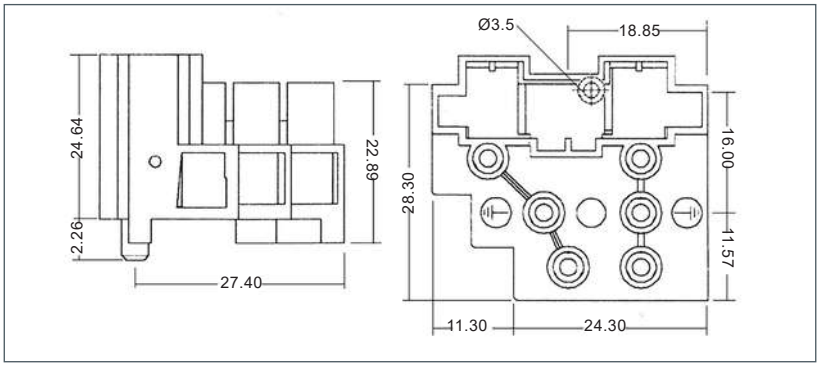

PART NO.	POLES
CMFTB/2	2
CMFTB/3	3

KEY FEATURES

2 and 3 pole use the same body | Accepts 5x20 and 6.3x25 fuses | Terminal marking

ASSOCIATED PRODUCTS

CFB0520F	- Glass 5x20mm quick blow fuses	page 228
CFB0520T	- Glass 5x20mm time delay fuses	page 228
CFB0521CF	- Ceramic 5x20mm quick blow fuses	page 229
CFB0521CT	- Ceramic 5x20mm time delay fuses	page 229
CFB06325FG	- Glass 6.3x25mm quick blow fuses	page 230
CFB06325TG	- Glass 6.3x25mm time delay fuses	page 230

+44 (0)1638 716101 | sales@camdenboss.com | www.camdenboss.com

We operate a constant improvement policy, our products are subject to change without notice.

Vers 2