1000 series

Compact fingertip controllers • switching technology



DISTINCTIVE FEATURES

One or two axis
5 A – 16 A switch solutions
Single or double pole
Bushing or screw mount
Variety of handle options

ENVIRONMENTAL SPECIFICATIONS

- Operating Temperature: -20 °C to +50 °C (-4 °F to + 122 °F)
- Sealing: IP65 (above panel, subject to handle)



ELECTRICAL SPECIFICATIONS

- Maximum Voltage: 250 VAC

MECHANICAL SPECIFICATIONS

- Mechanical Angle of Movement: 24° X & Y axis (subject to limiter plate)
- Expected Mechanical Life: 5 million lifecycles
- Mass/weight: 40 g (1.41 oz) (subject to handle)

MATERIALS

- Shaft: Stainless steel
- Boot: Neoprene
- Handles :
  BL - Phenolic
  D, M, AE - Aluminum
  F - Nylon
  H, T, AJ - Stainless steel
  J, V - ABS
- Contact : Gold plated silver (switch **1**), Silver (other switches)

The company reserves the right to change specifications without notice.

1000 series

Compact fingertip controllers • switching technology

MOUNTING

V3 SCREW MOUNT CUT-OUT

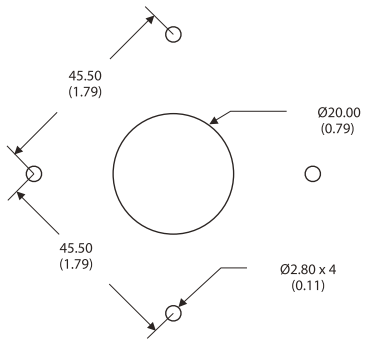

V4 SCREW MOUNT CUT-OUT

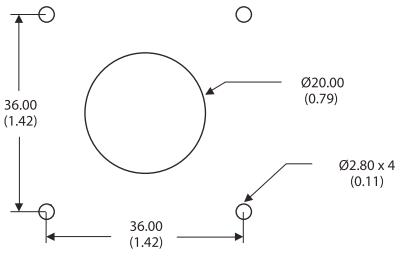

V4 BUSH MOUNT CUT-OUT

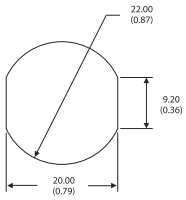

V3 SCREW MOUNT INSTALLATION



V4 SCREW MOUNT INSTALLATION



V4 BUSH MOUNT INSTALLATION



- The joystick is mounted from beneath the panel using the 4 x M2.5 machine screws, supplied with the joystick.
- Supplied as standard with the joystick is a round bezel which may be fitted (according to customer preference) to finish the front face of the panel. Fitting the bezel is optional, and is not necessary if the panel cut-out finishes the panel. If fitting the bezel is selected then the panel cut out should be toleranced such that the bezel is an interference fit. Additionaly bonding the bezel is recommended.

- The joystick is mounted from beneath the panel.
- Supplied as standard with all bush mount joysticks, is a neoprene sealing gasket. This should be fitted between the joystick and the panel, in applications where a good seal is needed.
- Suitable for panel up to 3 mm tick.
- Torque for fixing nut : < 1 Nm

1000 series

Compact fingertip controllers • switching technology

BUILD YOUR PART NUMBER

SWITCHES

1	6 A - V4*
2	16 A - V3
3	10 A - V4*
4	Right Angle V4*
5	5 A/250 V AC - V4* Faston Style
6	5 A/250 V AC - V3 Faston Style with screw fixing
7	10 A/250 V AC - V4* IP67

MOUNTING

D	22 mm Bush*
V	4 Point Screw

POLES

1	Single Pole
2	Double Pole*

LEVER

1	Long*
5	Standard V4*
6	For Pushbutton V4*
7	For Double Pole V4 or V3
9	Double Pole and Pushbutton V4*

HANDLE

BL	Round
D	Cylindrical
F	Conical
H	Tall Conical
J	Pushbutton*
M	Pushbutton*
T	Pushbutton*
V	Bullet
AE	Rocker*
AJ	Stainless Steel

LIMITER AND BEZEL SET

0	Not Supplied
1	Standard

BOOT

1	Screw Mount
5	Bush Mount*

MODIFIER

00	None
34	+ Limiter Fitted
39	Slot Limiter Fitted

NOTES:
*Unavailable with V3 construction

1000 series

Compact fingertip controllers • switching technology

V4 BUSH MOUNT



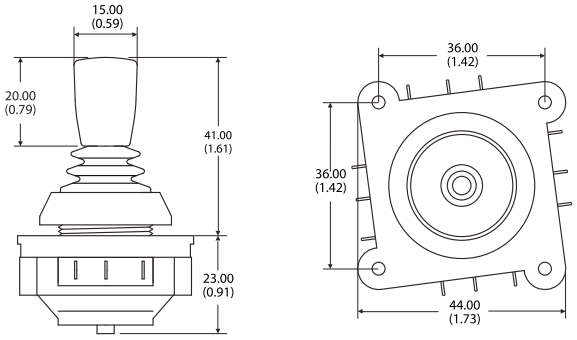

V4 SCREW MOUNT



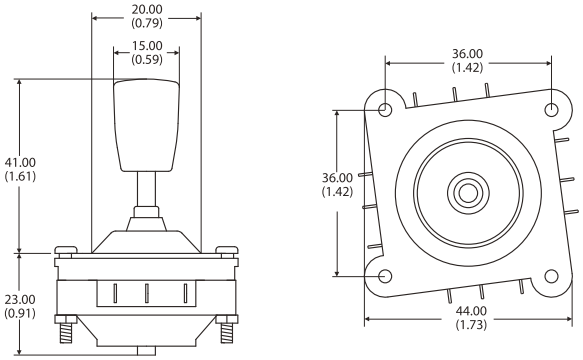

V4 SCREW MOUNT DOUBLE POLE



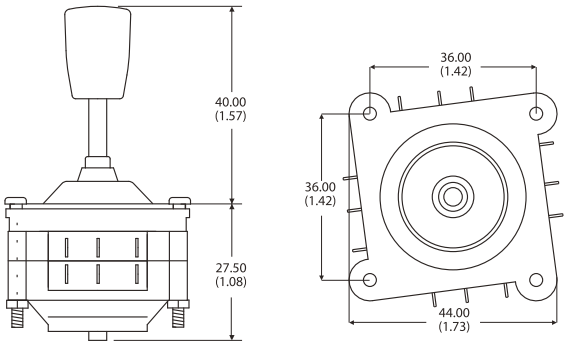

V3 SCREW MOUNT



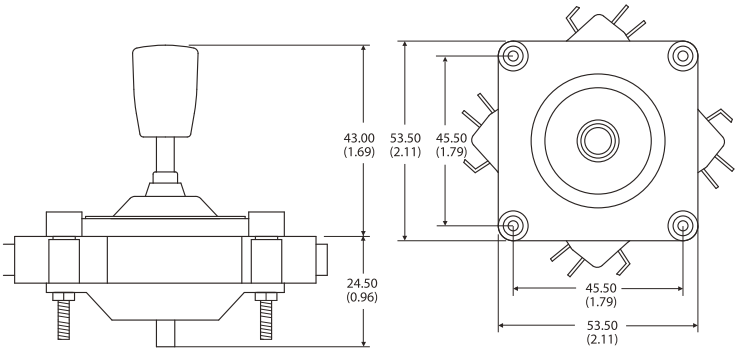

1000 series

Compact fingertip controllers • switching technology

HANDLE OPTIONS

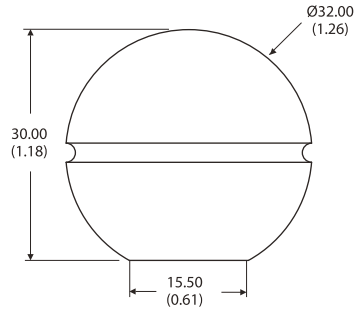

BL Round

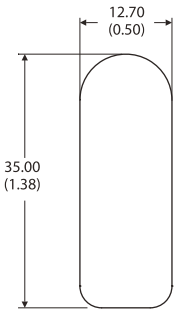

D Cylindrical

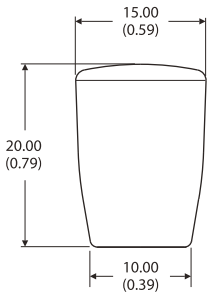

F Conical

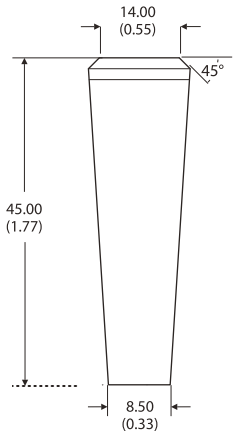

H Tall Conical

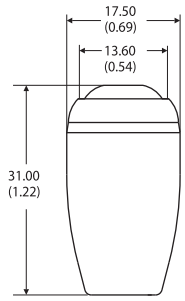

J, M or T Pushbutton

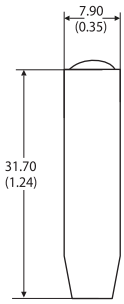

V Bullet

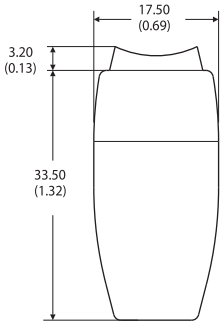

AE Rocker

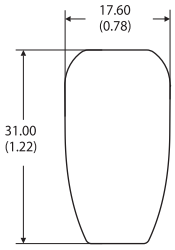

AJ Stainless Steel

- Finish and standard color:
  BL, V - Gloss black
  D, M, AE - Anodized black
  F, J - Matt black
  H - Natural Stainless Steel
  T, AJ - Polished Stainless Steel
- Pushbutton (**J, M, T)** and rocker switches (**AE**) are for bushmount configurations only.

- **BL** : Handle is supplied loose because it is larger than panel cutout. The handle should be press fitted to the joystick, once the joystick is installed in the panel.
- **J, M, T** : Use APEM IS switch
- **AE** : Use APEM TR switch
- Unless otherwise specified, all joysticks are supplied with black switches in the handles.

LIMITERS AND BEZEL SETS

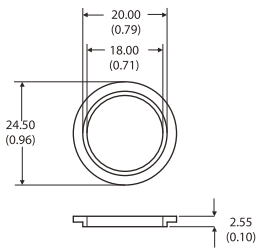

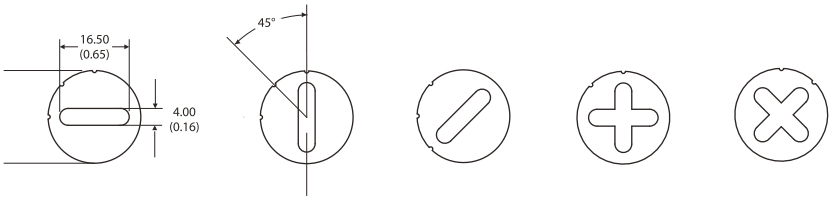

1000 series

Compact fingertip controllers • switching technology

CONFIGURATION OPTION

SWITCHES

Seven switch options are specified as standard. All are configured with changeover contacts, allowing the user flexibility of connection.

- Option 1 - V4 - 6 A/240 V AC should be specified where the joystick will be switching smaller current levels. These switches are supplied with gold flash terminals to ensure reliable switching at very low current levels.
- Option 2 - V3 - 16 A/240 V AC should be specified where the joystick will be switching up to 16 A.
- Option 3 - V4 - 10 A/240 V AC should be specified where the joystick may be switching up to 10 A.
- Option 4 - V4 - 5 A/250 V AC with right angle terminals, should be specified for PCB mounting or simpler termination.
- Option 5 - V5 - 5 A/250 V AC with 2.8 mm Faston style terminals.
- Option 6 - V3 - 16 A/250 V AC with long terminals and screw fixing.
- Option 7 - V4 - 10 A/250 V AC sealed to IP67.

Note: The construction of the joystick employing V3 switches is not available with as many configuration options.
Life and reliability of the switches is heavily determined by the type of application and parameters such as load.
Contact the factory for further advice about the expected switch performance under differing loads or DC supplies.

MECHANICAL OPERATION

All 1000 series are supplied with an open square gate. As a standard option the joystick may be supplied with an additional plastic limiter set, that allows the customer to retro-fit limiters to reduce the travel to single axis(-), cross (+) or diagonal (X) operation. For harsh environments metal limiters are also available.

Joysticks are supplied as standard without a cable harness, allowing the user flexibility of connection. Alternatively the joystick may be factory configured with fitted limiters or cable harnesses, upon customer request.

SEALING

Two boot options are offered as standard to provide an above-panel seal. When specifying a bush mount joystick select boot option 5 which yields an IP65 seal. Alternatively boot option 1 should be selected for 4 point screw mount joysticks which yields an IP67 seal.

As standard, a sealing gasket is supplied with all bush mount joysticks, to ensure a good seal between the joystick body and the panel. The sealing standards quoted are panel seals. It is assumed that the below panel area will be sealed. For applications where below panel seal can not be assured, switch option 7 should be selected.

DOUBLE POLE OPERATION

The construction of the joystick is designed such that both switches nominally trigger simultaneously. Such simultaneous triggering is subject to a ± 2º tolerance (between switches) owing to the mechanical tolerances and hysterisis of each switch.

MOUNTING

The 1000 series is available in two mounting options, four point screw mount or bush mount. The V4 screw mount option is supplied with M2.5 x 20 mm screws, whereas the larger construction of V3 screw mount joystick is supplied with M2.5 x 25 mm screws. All screws supplied are slotted, pan head machine screws, although longer pan head screws, or countersunk heads are also available upon request.

LEVERS

Lever option 5 provides for a low profile above the panel (41 mm/1.61 inch), this option is very popular for those applications requiring a compact, stubby design. Lever option 1 is an additional 5 mm/0.20 inch taller. Lever option 6 should be specified for a push button handle, and lever option 7 is designed for V4 double-pole, or V3 constructions. Lever option 9 is for double-pole and pushbutton joysticks. Additional custom levers are available upon request..