Fusion Splicer

NetPeppers CFS200



Quick Start Guide

Fusion Splicer

NetPeppers CFS200

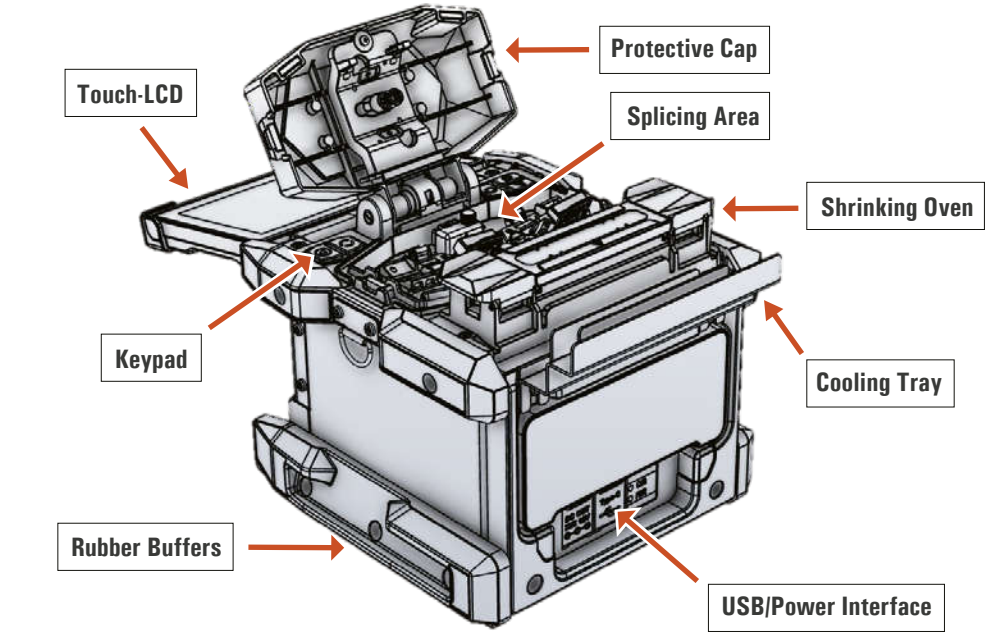

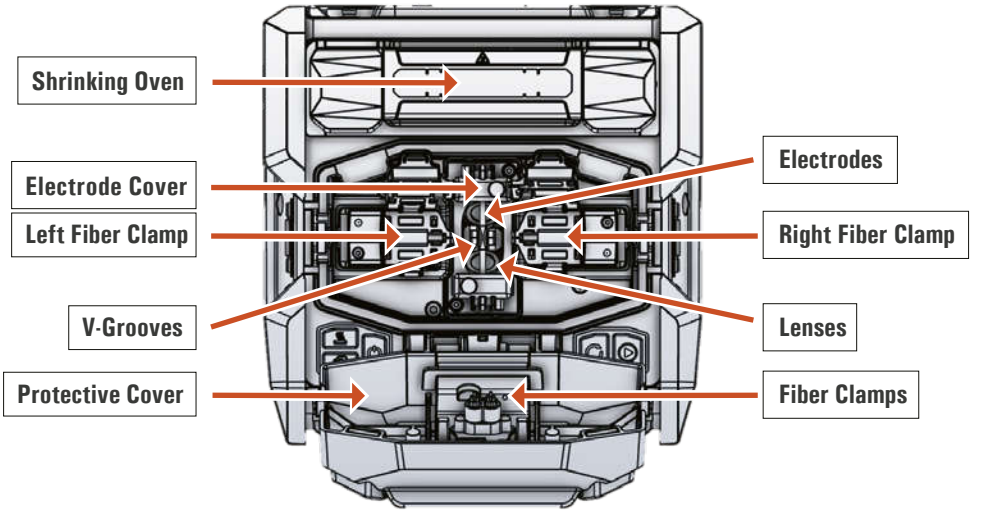



1

TURN ON SPLICER

Press and hold the power button on the top of the device for at least three seconds

---



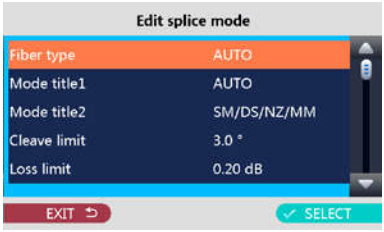

2

CREATE SPLICE PROFILE

- Press the main menu button
- Select the first menu item Splice Profiles
- Select an empty profile and press to edit
- Specify a fiber type with SELECT.
  Select AUTO if you want the device to automatically select all parameters (recommended)
- Return to the main menu with EXIT



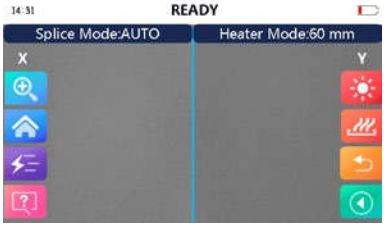

3

- **APPLY HEATING PROFILE**
  when using shrink splice protection
- In the main menu, select the menu item Heating Profiles
- Select one of the prefabricated profiles with the length of your splice protector
- Press SELECT to load the selected profile
- Return with EXIT to the main menu with, press to return to live view.

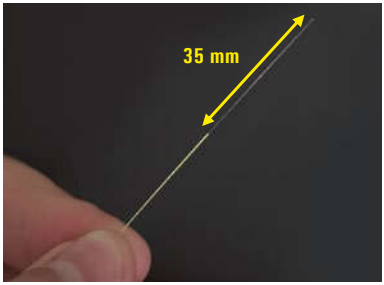

4

PREPARING FIBERS

- Remove all outer cable sheaths except for the acrylic primary coating (250 μm) directly on the fiber. The structure of fiber optic cable types is very different, the primary coating can be found in each variant.
- String a shrink sleeve onto one of the fibers if you want to use a shrink splice sleeve to protect the splice point.
- Use a fiber optic stripping tool to remove the primary coating (250 μm) on the exposed fibre piece over a length of approx. 35 mm.
- Clean the fiber with an alcohol-soaked, lint-free cleaning cloth.

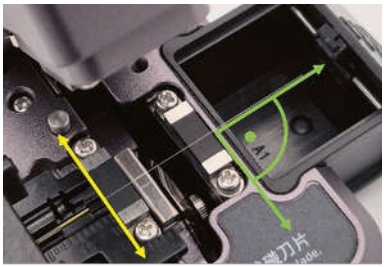

MAKE SURE THAT THE FIBER CUT FALLS INTO THE DROP CONTAINER OF THE OFC35 CLEAVER TO AVOID INJURIES.

5

BREAKING FIBER

- Open the OFC35 Cleaver
- Insert the fiber into the Cleaver OFC35 from the left into the appropriate channel
- The exposed fibre must come to rest at right angles to the two rubber pads if possible (see picture)
- Slide the primary coating to the first pad (yellow line on the right)
- Close both covers, the cleave process will be performed

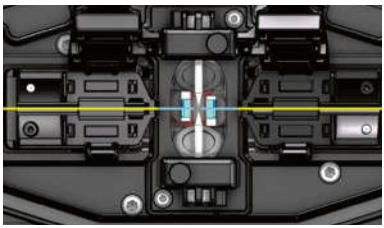

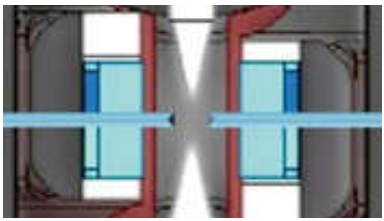

6

INSERTING FIBERS

- Now make sure that the fiber ends do not come into contact with anything to avoid contamination or damage to the fiber tip!
- Open the protective cap of the device
- Open the two universal fiber holders to the left and right of the illuminated electrodes
- Insert the two fiber ends into the blue V-grooves of the fiber holders. Make sure that the fibers are between the two V-grooves and the electrode tips (see picture)
- Close the fiber holder the fiber is inserted into
- Repeat steps 4-6 with the second fiber



7

SPLICING FIBERS

- Close the windshield over the splice site
- Press to start the splicing process

8

ATTACH SPLICE PROTECTION

After the splicing process has been completed, open the cover flap and carefully open the fiber holders.
When opened, the device performs a tensile test in which it moves the fiber holders outwards. Wait for this process.





When using the shrink splice protector:

- Slide the shrink splice protector centrally over the exposed fiber. The unprotected area must be completely covered.
- Insert the protective sleeve with the fiber into the shrink oven and press to begin shrinking.
- Wait for the red activity LED to turn off. The shrinking process is complete.
- Remove the finished splice from the shrink oven and let it cool down on the cooling plate provided.





When using the crimp splice protector with the TELENT splice protection press:

- Insert Crimp Splice Protection Sleeve into the TELENT Splice Protection Press
- Grasp the fiber with both hands and carefully remove the splice from the fiber holders
- Keep the fiber at light tension and place the unprotected fiber area in the center of the crimp splice protection sleeve
- Use both thumbs to press down with light pressure

SPLICE PATTERNS AND THEIR CAUSES

PHENOMENON / SPLICE IMAGE	REASON	ACTION REQUIRED
Axial misalignment of the fiber cores 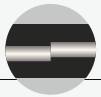	Dust or debris on the V-groove or the clamping lugs of the protective cover	Cleaning the V-groove and the clamping lugs Perform motor calibration
Bending 	One or more fibers were inserted at an angle	Insert both fibers straight into the device
	Irregular fracture pattern of the fiber end faces	Check the cleave quality of the cleaver
	Position of the fiber holders is misaligned	Adjust the alignment of the slides under the fiber holders
Core step displacement 	Dust or debris on the V-grooves or the clamping lugs of the protective cover	Clean the V-grooves and the clamping lugs
Core bending 	Irregular fracture pattern of the fiber end faces	Check the cleave quality of the cleaver
	Low prefuse power or too short prefuse time	Increase prefuse power and/or increase prefuse time in the selected splice profile
Core fields do not match 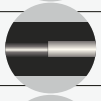	Different fibers are used	No action required. Different optical properties of the fibers. Multimode and singlemode can NOT be spliced
Dirt combustion 	Irregular fracture pattern of the fiber end faces	Check the cleave quality of the cleaver
	Insufficient fiber cleaning	Clean the fiber thoroughly or increase the length of the cleaning arc
Blistering 	Irregular fracture pattern of the fiber end faces	Check the cleave quality of the cleaver
	Insufficient arc power or splicing time	Perform ARC calibration
	Insufficient fiber cleaning	Clean the fiber thoroughly or increase the length of the cleaning arc
Separated fibers 	The fiber overlap is too small	Increase fiber overlap
	Too much arc power	Perform ARC calibration
	The secondary coating protrudes too far into the fiber holders, the fiber slips back into the cable	Remove the secondary coating far enough that only the primary coating is pinched
Thickened cladding 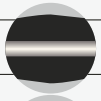	The fiber overlap is too large	Reduce fiber overlap and perform motor calibration
Constricted cladding and core 	Too much arc power	Perform ARC calibration
	The fiber overlap is too small	Increase fiber overlap
	The secondary coating protrudes too far into the fiber holders, the fiber slips back into the cable	Remove the secondary coating far enough that only the primary coating is pinched
Vertical Line, Slits 	Arc power that is too low	Perform ARC calibration
Core Artifacts 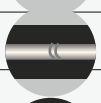	Too low arc power or splicing time	Increase Arc power or splicing time
Fine, vertical line No visible line 	Good splice. An even, vertical line indicates a good splice. The line can be dark/light on one side	No action required. This is due to the diffusion of the fiber doping at the splice point and is a normal phenomenon

SPLICING NOTIFICATIONS

MESSAGE	ACTION REQUIRED
Clean left fiber! **Clean right fiber!** **Clean L+R fibres!**	Clean the fiber(s) thoroughly and repeat the cleave process. Clean the V-grooves, the clamping lugs of the protective cover and the lenses.
Fiber push error!	Reinsert the fibers and make sure the fibers are in the V-grooves. Make sure that the fibers outside the device are not under tension.
X Motor out of range! **Y Motor out of range!**	Reinsert the fibers and make sure the fibers are in the V-grooves. Perform display calibration via maintenance menu. Perform a motor calibration via maintenance menu.
Reset left fiber! **Reset right fiber!** **Reset left&right fibers!**	Reinsert the fiber(s) and make sure the fiber(s) are in the V-grooves. Check the axis offset limit of the fiber(s) in your splice profile. Make sure that the fiber(s) outside the device are not under tension.
Left fiber X/Y set error! **Right fiber X/Y set error!** **Fiber X/Y set error!**	Clean the fiber(s) thoroughly and repeat the cleave process. Clean the V-grooves, the clamping lugs of the protective cover and the lenses. Perform a motor calibration via maintenance menu.
ARC center offset too large!	Perform an ARC calibration via maintenance menu. Check the electrodes and replace them if necessary.
LENS offset too large!	Perform display calibration via maintenance menu. Perform a motor calibration via maintenance menu.
Please turn off the cover!	Close the protective cover. Check whether something is preventing the protective cover from closing completely. If the message persists despite the protective cover being closed, please contact our support.
Please replace electrodes	Replace the electrodes and perform the electrode stabilization procedure in the maintenance menu.
Left fiber shape error! **Right fiber shape error!** **L-R fibers shape error!**	Clean both fibers thoroughly and repeat the cleave process. Clean the V-grooves and the clamping lugs of the protective cover. Check the cleave quality of the cleaver and, if necessary, turn the blade one position further.
Left fiber angle error! **Right fiber angle error!** **L-R fibers angle error!**	Check the cleave of the cleaver and, if necessary, turn the blade one position further. Reduce the time of the cleaning arc.
Clear left v-groove **Clear right v-groove**	Clean the V-grooves. Clean the fiber(s) thoroughly and repeat the cleave process.

MAINTENANCE

Keep your device clean.
Fiber or coating residues can damage the mechanics or lead to errors in the splicing process

- Do not carry out fiber stripping above the device.
- Wipe the device only with a damp cloth. Do not use harsh cleaners or solvents on the case and display.
- Close the protective cover when not in use.
- Regularly clean the fiber holders, V-grooves, clamping lugs and lenses of the device with lint-free cleaning equipment and alcohol.
- If the splice quality deteriorates and deposits form at the electrode tips, replace the electrodes with a fresh pair.
- The service life of the electrodes depends largely on the environmental conditions. High humidity and cold lead to increased wear.

WARRANTY

NetPeppers GmbH warrants for a period of 12 months from the date of sale that: the product is free from defects in materials and workmanship when used properly in accordance with the operating regulations.

DISPOSAL

Do not dispose of the appliance and its accessories with household waste.
Equipment and accessories must be disposed of in accordance with local regulations.
For more information, see www.stiftung-ear.de or www.bmlfuw.gv.at.
WEEE Reg. No. DE24330012



NetPeppers GmbH
Carl-Benz-Str. 5 · 82266 Inning · Germany
Tel.: +49-89-219097300 · E-Mail: mail@netpeppers.com

www.netpeppers.com