TI01594C/07/EN/01.21
71519567
2021-03-08

Technical Information
Memosens CPF81E

pH sensor for mining operations, industrial water and wastewater treatment



Digital with Memosens 2.0 technology

Application

- Flotation
- Leaching
- Neutralization
- Outlet monitoring
- Inlet and outlet monitoring

Your benefits

- With proven KNO_3 electrolyte bridge for improved protection against electrode poisons such as S^{2-} or CN^- ions
- Optionally available with flat membrane for improved wear resistance
- Threaded connection NPT ¾" top and bottom for easy installation at user end
- Suitable for measurements in the 0 to 14 pH range and in the 0 to 110 °C (32 to 230 °F) temperature range (application L)
- Integrated NTC 30K temperature sensor for effective temperature compensation
- Protection guard against damage

Other advantages provided by Memosens technology

- Maximum process safety thanks to non-contact, inductive signal transmission
- Data security thanks to digital data transmission
- Very easy to use as sensor data are saved in the sensor
- Predictive maintenance can be performed by recording sensor load data in the sensor

Endress+Hauser
People for Process Automation

Function and system design

Measuring principle

pH measurement

The pH value is used as a unit of measurement for the acidity or alkalinity of a medium. The membrane glass of the electrode delivers an electrochemical potential that depends on the pH value of the medium. This potential is generated by the selective accumulation of H^+ ions on the outer layer of the membrane. As a result, an electrochemical boundary layer with an electrical potential difference forms at this point. An integrated Ag/AgCl reference system serves as the required reference electrode.

The measured voltage is converted to the corresponding pH value using the Nernst equation.

Measuring system

A complete measuring system comprises:

- Sensor CPF81E
- Transmitter, e.g. Liquiline CM44x/R or Liquiline M CM42
- Memosens data cable , e.g. CYK10

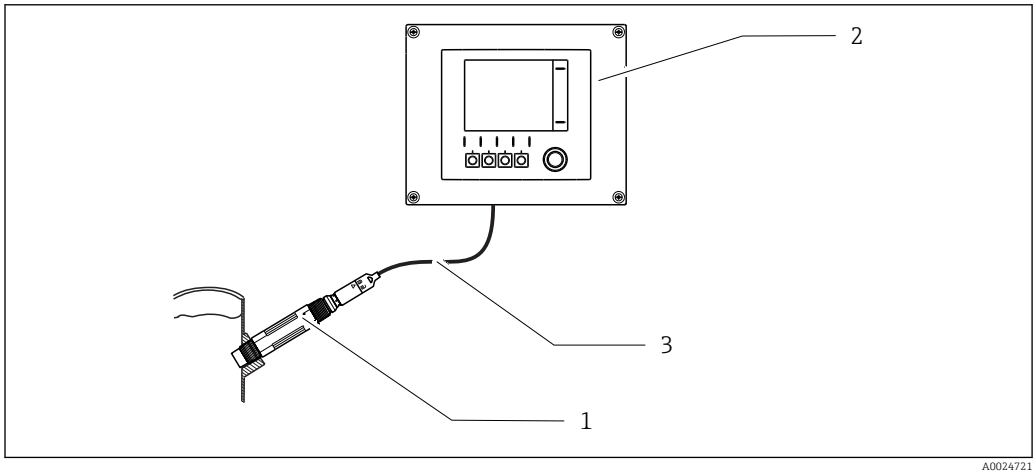

1 Example of a measuring system

1 Sensor CPF81E
2 Transmitter Liquiline CM44x
3 Memosens data cable CYK10

Communication and data processing

Communication with the transmitter

Always connect digital sensors with Memosens technology to a transmitter with Memosens technology. Data transmission to a transmitter for analog sensors is not possible.

Digital sensors can store measuring system data in the sensor. These include the following:
- Manufacturing data
  - Serial number
  - Order code
  - Date of manufacture
- Calibration data
  - Calibration date
  - Slope at 25 °C (77 °F)
  - Zero point at 25 °C (77 °F)
  - Offset of integrated temperature sensor
  - Number of calibrations
  - Calibration history
  - Serial number of the transmitter used to perform the last calibration or adjustment
- Application data
  - Temperature application range
  - pH application range
  - Date of first commissioning
  - Maximum temperature value
  - Hours of operation under extreme conditions
  - Sensor load

The data listed above can be displayed with Liquiline CM42, CM44x, and Memobase Plus CYZ71D.

Dependability

Reliability

Easy handling
Sensors with Memosens technology have an integrated electronics unit that stores calibration data and other information (e.g. total hours of operation or operating hours under extreme measuring conditions). Once the sensor has been connected, the sensor data are transferred automatically to the transmitter and used to calculate the current measured value. As the calibration data are stored in the sensor, the sensor can be calibrated and adjusted independently of the measuring point. The result:
- Easy calibration in the measuring lab under optimum external conditions increases the quality of the calibration.
- Pre-calibrated sensors can be replaced quickly and easily, resulting in a dramatic increase in the availability of the measuring point.
- Thanks to the availability of the sensor data, maintenance intervals can be accurately defined and predictive maintenance is possible.
- The sensor history can be documented on external data carriers and evaluation programs.
- The saved application data of the sensor can be used to determine the continued use of the sensor in a targeted manner.

Integrity

Data security thanks to digital data transmission
Memosens technology digitizes the measured values in the sensor and transmits the data to the transmitter via a non-contact connection that is free from potential interference. The result:
- If the sensor fails or there is an interruption in the connection between the sensor and transmitter, this is reliably detected and reported.
- The availability of the measuring point is reliably detected and reported.

Security

Maximum process safety
With inductive transmission of the measured value using a non-contact connection, Memosens guarantees maximum process safety and offers the following benefits:
- All problems caused by moisture are eliminated:
  - No corrosion at the connection
  - Measured values cannot be distorted by moisture
- The transmitter is galvanically decoupled from the medium. Issues concerning "symmetrical high-impedance" or "asymmetry" or the type of impedance converter are a thing of the past.
- Electromagnetic compatibility (EMC) is guaranteed by screening measures for the digital transmission of measured values.
- Intrinsically safe electronics mean operation in hazardous areas is not a problem. Complete flexibility thanks to individual Ex approvals for all components, such as sensors, cables and transmitters.

Input

Measured variables

pH value

Temperature

Measuring range

Application L
- pH: 0 to 14
- Temperature: 0 to 110 °C (32 to 230 °F)

Application N
- pH: 0 to 11
- Temperature: 0 to 80 °C (32 to 176 °F)

Power supply

Electrical connection

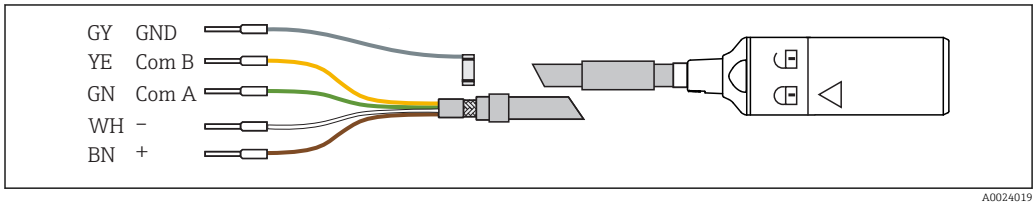

2 Measuring cable CYK10 or CYK20

▶ Connect the Memosens measuring cable, e.g. CYK10 or CYK20 to the sensor.

For further information on cable CYK10, see BA00118C

Performance characteristics

Reference system

Double chamber reference system
- 1st chamber: bridging electrolyte: gel - 3 $MKNO_3$
- 2nd chamber: Ag/AgCl reference lead, bridging electrolyte: gel KCl, 3M

Installation

Installation instructions

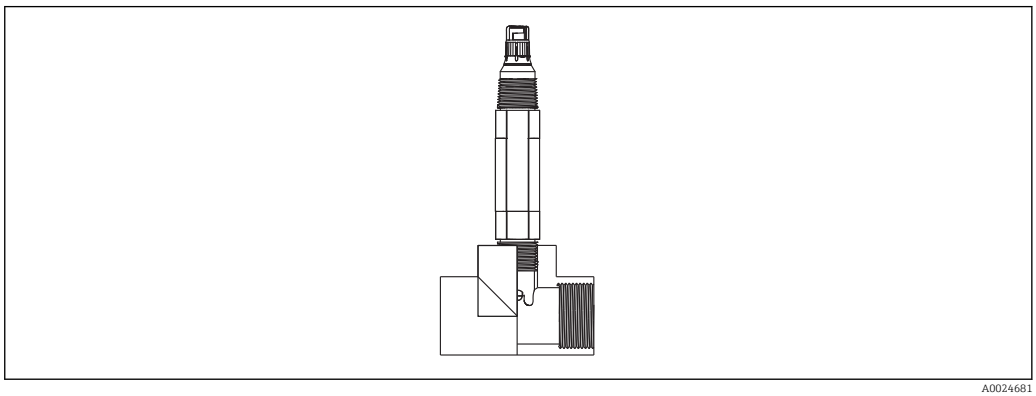

A0024681

3 Flow installation

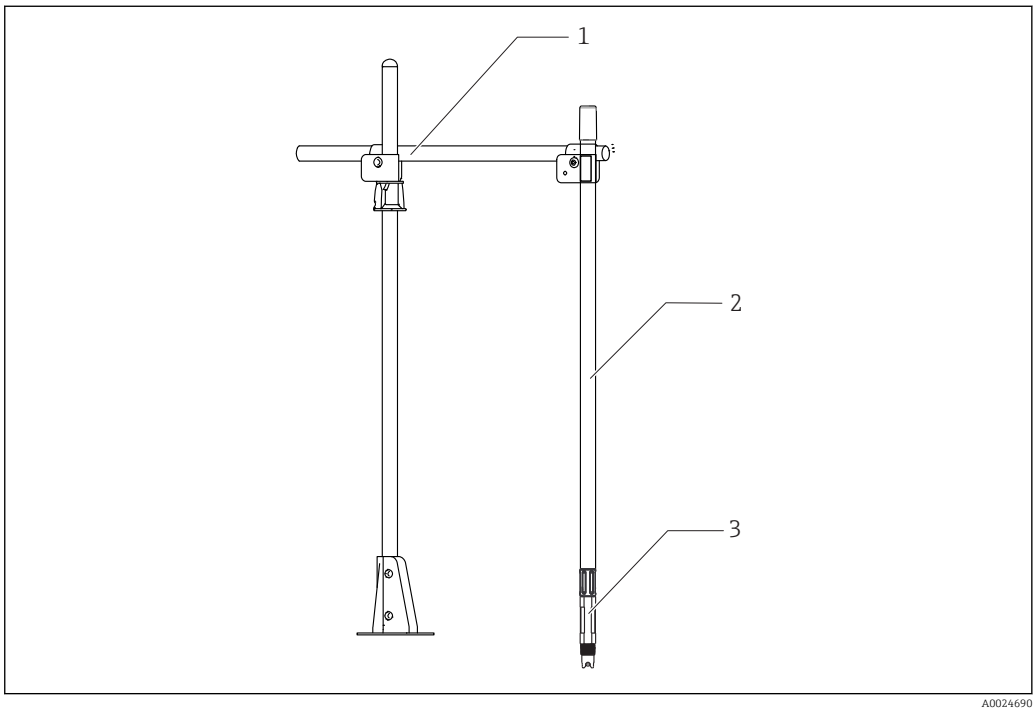

A0024690

4 Installation with immersion assembly with Flexdip CYA112

1 CYH112 holder
2 CYA112 assembly
3 Sensor

- Before screwing in the sensor, make sure the assembly thread, the O-rings and the sealing surface are clean and undamaged and that the thread runs smoothly.
- Pay attention to the installation instructions provided in the Operating Instructions of the assembly used.

▶ Screw in the sensor and tighten by hand with a torque of 3 Nm (2.21 lbf ft) (specifications only apply if installing in Endress+Hauser assemblies).

For detailed information on removing the moistening cap, see BA01988C

Environment

Ambient temperature range

NOTICE

Risk of damage from frost!

► Do not use the sensor at temperatures below .

Storage temperature

0 to 50 °C (32 to 122 °F)

Degree of protection

IP 68 (10 m (33 ft) water column, 25 °C (77 °F), 45 days, 1 M KCl)

Electromagnetic compatibility (EMC)

Interference emission and interference immunity as per:
- EN 61326-1:2013
- EN 61326-2-3:2013

For ESD > 2 kV to 8 kV: reduced accuracy ± 1.5 pH

Process

Process temperature range

- Application L: 0 to 110 °C (32 to 230 °F)
- Application N: 0 to 80 °C (32 to 176 °F)

Process pressure range

0.8 to 11 bar (11.6 to 159.5 psi) (absolute)

⚠ CAUTION

Pressurization of sensor due to prolonged use under increased process pressure

Possibility of sudden rupture and injury from glass splinters!

► Avoid fast heating of these pressurized sensors if they are used under reduced process pressure or under atmospheric pressure.

► When handling these sensors, always wear protective goggles and appropriate protective gloves.

Conductivity

50 µS/cm (at atmospheric pressure, without flow) (minimized flow; pressure and temperature must remain constant)

Pressure/temperature ratings

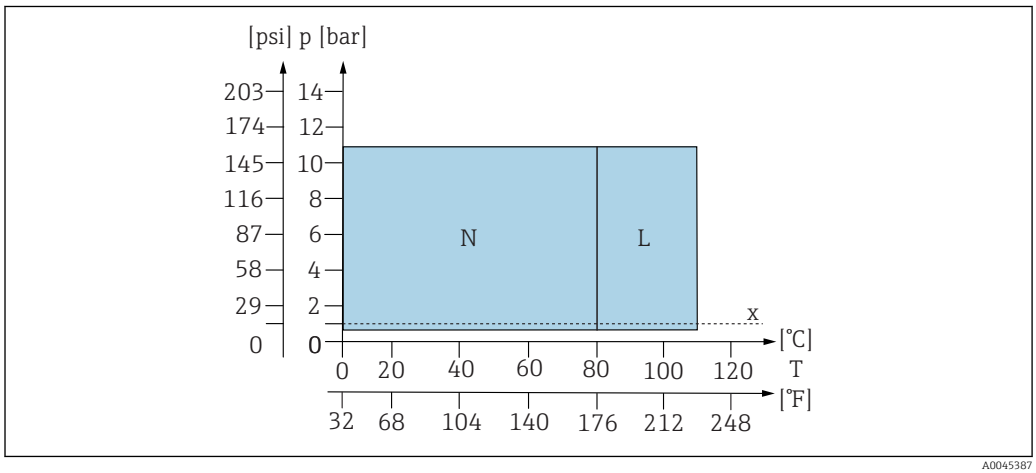

5 Pressure/temperature ratings

N Application N
L Application L
x Atmospheric pressure

Mechanical construction

Design, dimensions

Integrated preamplifier (optional)

Structure	cast in sensor body
Power supply	via integrated coin cells
Reference potential:	reference electrode

With preamplifier versions, the sensor check function (SCS) of the transmitter is ineffective and should be turned off.

Dimensions

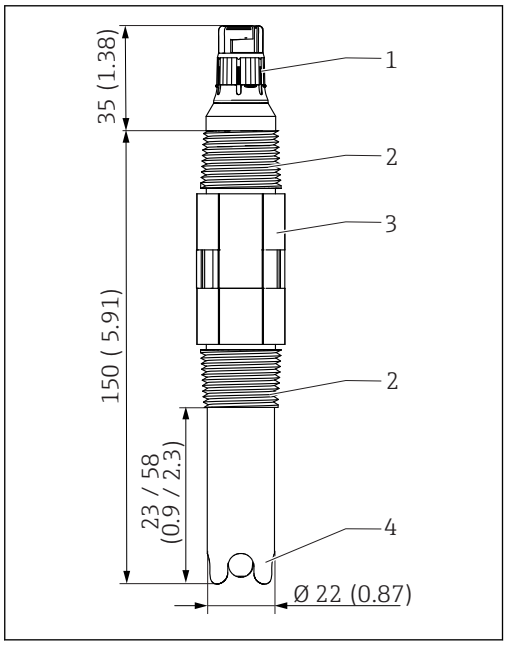

6 *CPF81E with spherical membrane 58 mm (2.3 in). Engineering unit: mm (in)*

1 *Memosens plug-in head*
2 *NPT ¾" thread*
3 *Width across flats 26*
4 *Protection guard*

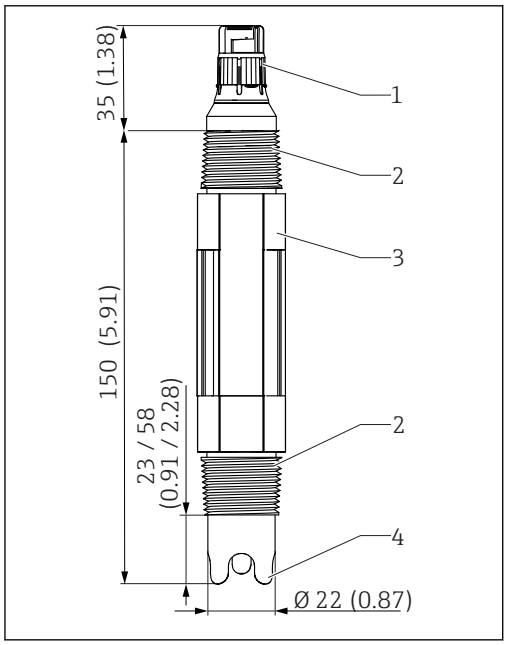

7 *CPF81E with spherical membrane 23 mm (0.9 in). Engineering unit: mm (in)*

1 *Memosens plug-in head*
2 *NPT ¾" thread*
3 *Width across flats 26*
4 *Protection guard*

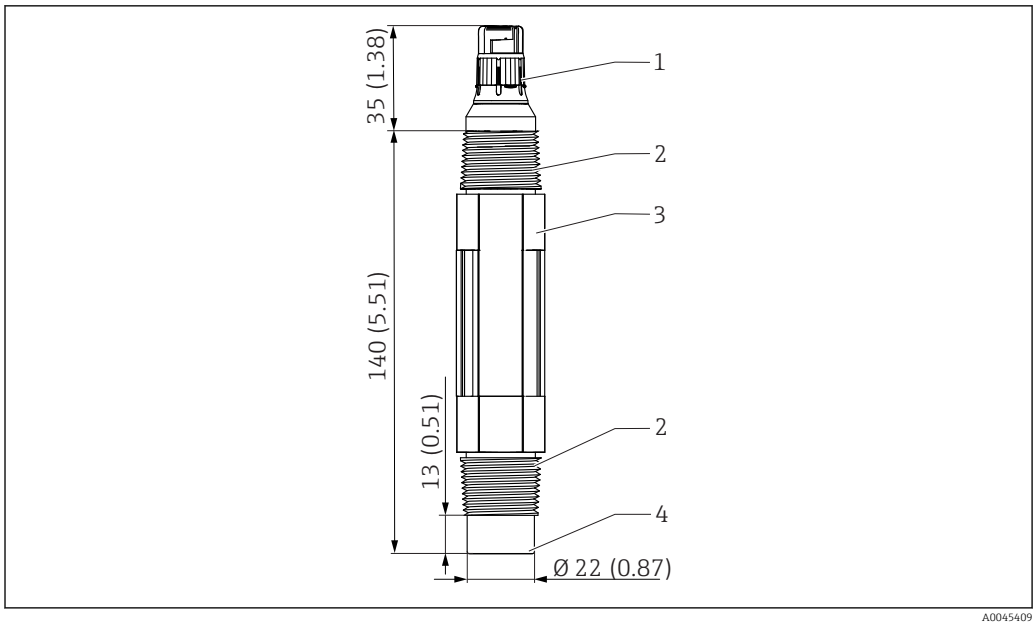

8 CPF81E with flat membrane. Engineering unit: mm (in)

1 Memosens plug-in head
2 NPT ¾" thread
3 Width across flats 26
4 Flat membrane

Weight	0.12 to 0.15 kg (0.26 to 0.33 lb), depending on the version and excluding a cable	
Materials	Housing, sensor shaft	PPS
	pH sensor (in contact with medium)	Lead-free membrane glass, suitable for process applications
	Double chamber reference system	KNO_3 and KCl/AgCl
Plug-in head	Memosens plug-in head for digital, non-contact data transmission, pressure resistance 16 bar (232 psi) (relative)	
Process connections	NPT ¾"	

Certificates and approvals

CE mark

The product meets the requirements of the harmonized European standards. As such, it complies with the legal specifications of the EU directives. The manufacturer confirms successful testing of the product by affixing to it the CE mark.

Additional certification

TÜV certificate for Memosens plug-in head

Pressure resistance 16 bar (232 psi) relative, minimum three times the safety pressure

EAC

The product has been certified according to guidelines TP TC 004/2011 and TP TC 020/2011 which apply in the European Economic Area (EEA). The EAC conformity mark is affixed to the product.

Ordering information

Product page

www.endress.com/cpf81e

Product Configurator

On the product page there is a **Configure** button to the right of the product image.

1. Click this button.
   ↳ The Configurator opens in a separate window.
2. Select all the options to configure the device in line with your requirements.
   ↳ In this way, you receive a valid and complete order code for the device.
3. Export the order code as a PDF or Excel file. To do so, click the appropriate button on the right above the selection window.

For many products you also have the option of downloading CAD or 2D drawings of the selected product version. Click the **CAD** tab for this and select the desired file type using picklists.

Scope of delivery

The delivery comprises:
- Sensor in the version ordered
- Operating Instructions

Accessories

The following are the most important accessories available at the time this documentation was issued.

► For accessories not listed here, please contact your Service or Sales Center.

Assembly

Flexdip CYA112
- Immersion assembly for water and wastewater
- Modular assembly system for sensors in open basins, channels and tanks
- Material: PVC or stainless steel
- Product Configurator on the product page: www.endress.com/cya112

Technical Information TI00432C

Measuring cable

Memosens data cable CYK10
- For digital sensors with Memosens technology
- Product Configurator on the product page: www.endress.com/cyk10

Technical Information TI00118C

Measuring cable CPK9
- Terminated measuring cable for connecting analog sensors with TOP68 plug-in head
- Selection in accordance with product structure
- Product Configurator on the product page: www.endress.com/cpk9

Technical Information TI00118C

Buffer solutions

High-quality buffer solutions from Endress+Hauser - CPY20
The secondary buffer solutions have been referenced to primary reference material of the PTB (German Federal Physico-technical Institute) or to standard reference material of NIST (National Institute of Standards and Technology) according to DIN 19266 by a laboratory accredited by the DAkkS (German accreditation body) according to DIN 17025.
Product Configurator on the product page: www.endress.com/cpy20



www.addresses.endress.com

Endress+Hauser

People for Process Automation