5311 2686	DATA SHEET	LAPP
Valid from: 02.12.2021	SKINTOP® CLICK / CLICK-R	

The polyamide-based SKINTOP® CLICK / CLICK-R with its snap-system enables very fast and easy installation and the integral locking features guarantees permanent vibration resistance. It is designed for use, above all for particular functional safety in manufacturing of machines and equipment, in measuring, controlling and automation, in electronic technology, switch cabinet technology.



Material:

Gland body	Polyamide
Cap nut	Polyamide
Sealing insert	Elastomer
Pressure nut	Polyamide, fibreglass reinforced
Sealing flat washer (Ø12 up to Ø25)	Elastomer
O-Ring (Ø32)	NBR

Technical Features:

Connecting diameter	Ø12 up to Ø32	
Protection class	Size Ø12:	IP68 – 4bar/30min acc. to EN 60529
	Size Ø16 up to Ø25:	IP68 – 5bar/30min acc. to EN 60529
	Size Ø32:	IP68 – 1bar/30min acc. to EN 60529
	All Sizes:	Type 1 and Type 12, acc. to UL50E
Strain relief	Categories A acc. to EN 62444	
Design	CLICK	Standard
	CLICK-R	Standard with reducing
Temperature range	Dynamic	-20°C up to +100°C
	Static	-40°C up to +100°C
	Recommended mounting temperature	+20±5°C

Additional features:

Fire Classification	V2 acc. to UL 94
UV-resistant	SKINTOP® CLICK / CLICK-R black acc. to ISO 4892-2

Color:

Black, RAL 9005
Silver-grey, RAL 7001
Light grey, RAL 7035

Approbation:

(Test in acc. to UL 514B)

File Nr. E79903
(Test in acc. to UL514B)

Reference Standards:

EN 62444

We reserve all rights according to DIN ISO 16016.

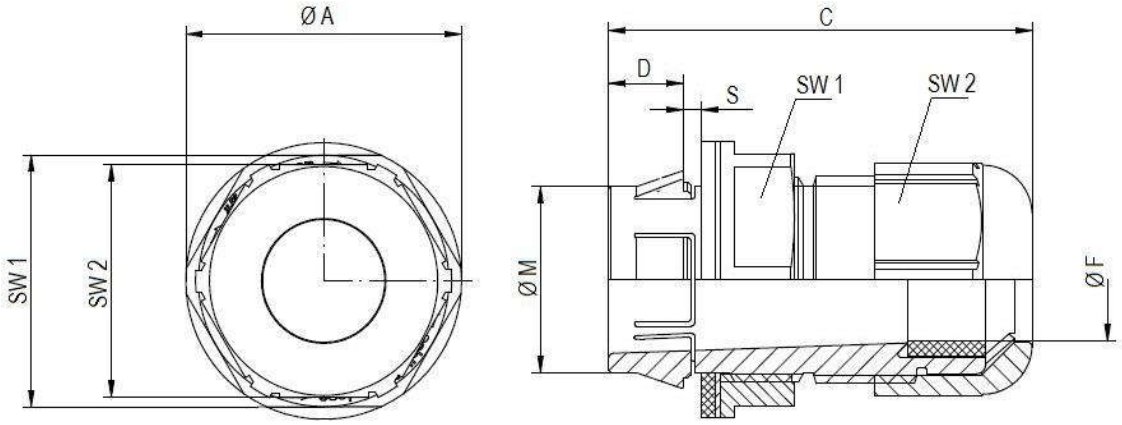

SKINTOP® CLICK

Größe	Ø M [mm] Installation hole	SW1 / SW2 [mm]	Ø A [mm]	C [mm]	D [mm]	Ø F [mm] Clamping range	S [mm] Wand-stärke	Artikel-Nr.		
								RAL 7035	RAL 7001	RAL 9005
Ø 12	Ø 12,3 $_{-0,2}$	18 / 15	20,0	40	8	4,5–7	1–4	53112692	53112921	53112923
Ø 16	Ø 16,3 $_{-0,2}$	22 / 19	24,2	42	8	5–9	1–4	53112686	53112876	53112882
Ø 20	Ø 20,3 $_{-0,2}$	27 / 25	29,7	45	8	7–13	1–4	53112687	53112877	53112883
Ø 25	Ø 25,3 $_{-0,2}$	32 / 30	35,2	48	8	9–17	1–4	53112688	53112878	53112884
Ø 32	Ø 32,3 $_{-0,2}$	40 / 36	44,0	56	8	11–20	1–4	53112694	53112922	53112924

SKINTOP® CLICK-R

Größe	Ø M [mm] Montage-Bohrung	SW1 / SW2 [mm]	Ø A [mm]	C [mm]	D [mm]	Ø F [mm] Klemm-bereich	S [mm] Wand-stärke	Artikel-Nr.		
								RAL 7035	RAL 7001	RAL 9005
Ø 12	Ø 12,3 $_{-0,2}$	18 / 15	20,0	40	8	3,5–5	1–4	53112925	53112927	53112929
Ø 16	Ø 16,3 $_{-0,2}$	22 / 19	24,2	42	8	4–7	1–4	53112689	53112879	53112885
Ø 20	Ø 20,3 $_{-0,2}$	27 / 25	29,7	45	8	5–10	1–4	53112690	53112880	53112886
Ø 25	Ø 25,3 $_{-0,2}$	32 / 30	35,2	48	8	6–13	1–4	53112691	53112881	53112887
Ø 32	Ø 32,3 $_{-0,2}$	40 / 36	44,0	56	8	7–15	1–4	53112926	53112928	53112931

For more information please see our current catalogue. Please do not hesitate to contact our laboratory if there are any questions regarding resistance against aggressive agents and special oil.

We reserve all rights according to DIN ISO 16016.