Ultrasonic Sensor
Diffuse Mode Sensor
RU300U-M30E-LI8X2-H1151

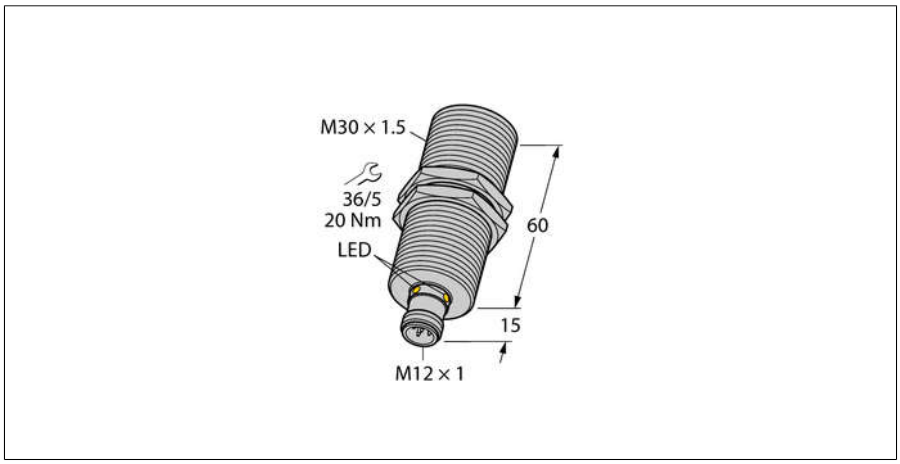

- **Smooth sonic transducer face**
- **Cylindrical housing M30, potted**
- **Connection via M12 x 1 male**
- **Measuring range adjustable via Easy-Teach**
- **Temperature compensation**
- **Blind zone: 30 cm**
- **Range: 300 cm**
- **Resolution: 1 mm**
- **Sonic cone angle: 15°**
- **Analog output, 4..20 mA, additional switching output PNP**

Type designation	RU300U-M30E-LI8X2-H1151
Ident no.	1610099
Operating mode	Ultrasonic diffuse mode sensor
Range	30…300cm
Resolution	1 mm
Ultrasound frequency	120 kHz
Repeat accuracy	0.15 % of full scale
Temperature drift	1.5% of full scale
Linearity error	≤ ± 0.5 %
Edge lengths of the nominal actuator	100 mm
Approach speed	≤ 8 m/s
Pass speed	≤ 1.5 m/s
Operating voltage	15…30 VDC
Residual ripple	10 % U_{ss}
DC rated operational current	≤ 150 mA
No-load current I_0	≤ 50 mA
Load resistance	≤ 1000 Ω
Residual current	≤ 0.1 mA
Response time typical	190 ms
Readiness delay	300 ms
Output function	Analog, Analog output
Output 1	Analog output
Current output	4…20 mA
Switching frequency	3.3 Hz
Voltage drop at I_e	≤ 2.5 V
Short-circuit protection	yes/ Cyclic
Reverse polarity protection	yes
Wire breakage protection	yes
Design	Threaded barrel,M30
Radiation direction	straight
Dimensions	75 x Ø30 mm
Housing material	Metal, CuZn, Nickel-plated
Max. tightening torque of connector B	75 Nm
Transducer material	Plastic, Epoxyd resin and PU foam
Electrical connection	Connectors, M12 × 1, 5-wire
Protection class	IP67
Ambient temperature	-25…+70 °C
Storage temperature	-40…+80 °C
Declaration of conformity EN ISO/IEC	EN 60947-5-7
Vibration resistance	IEC 60068-2
MTTF	191 years
MTTF note	acc. to SN 29500 (Ed. 99) 40 °C
Switching state	LED,Yellow
Object detected	LEDGreen

Wiring Diagram

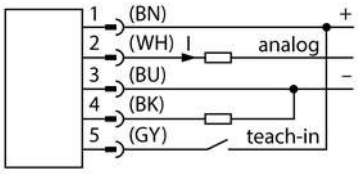

Functional principle

Ultrasonic sensors capture a multitude of objects contactlessly and wear-free with ultrasonic waves. It does not matter whether the object is transparent or opaque, metallic or non-metallic, firm, liquid or powdery. Even environmental conditions such as spray, dust or rain hardly affect their function.

The sonic cone diagram indicates the detection range of the sensor. In accordance with standard EN 60947-5-7, quadratic targets in a range of sizes (20 x 20 mm, 100 x 100 mm) and a round rod with a diameter of 27 mm are used.

Important: The detection ranges for other targets may differ from those for standard targets due to the different reflection properties and geometries.

Sonic Cone

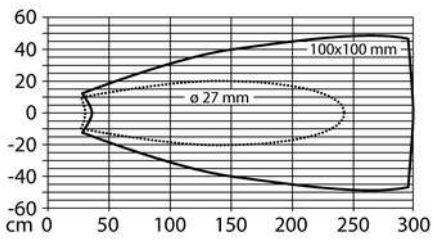

Edition • 2018-05-20T15:06:25+02:00

Mounting instructions/Description

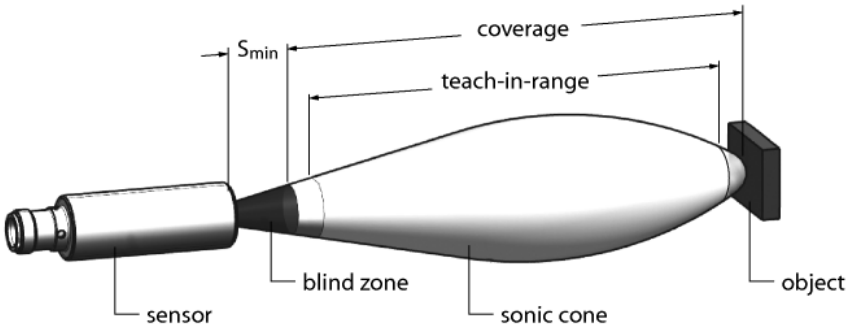

Setting the limit values

The ultrasonic sensor has an analog output with teach-able measuring range. Teaching is implemented via the teach adapter. The green and yellow LEDs indicate whether the sensor has detected the object.

Teach

Connect the TX1-Q20L60 teach adapter between the sensor and connection cable

- Position object for remote limit value
- Press the button against Ub for 2 - 7 seconds
- Position object for close limit value
- Press the button against Ub for 8 - 11 seconds

Optional: Inversion of analog output

- Press the button for 12 - 17 seconds

LED response

Successful teaching is displayed with a fast flashing LED. Thereafter, the sensor automatically runs in normal operating mode. Unsuccessful teaching is indicated by the LED flashing alternately green and yellow.
In normal operation, the two LEDs indicate the status of the sensor.

- Green: Object within the detection range, but not in the measuring range
- Yellow: Object is within the measuring range
- Off: Object outside the detection range or signal loss

Edition • 2018-05-20T15:06:25+02:00

Accessories

Type code	Ident no.	Description	
MW-30	6945005	Mounting bracket for threaded barrel devices; material: Stainless steel A2 1.4301 (AISI 304)	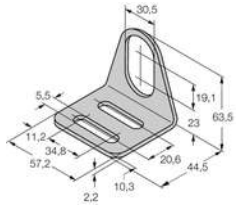

Wiring accessories

Type code	Ident no.	Description	
RKC4.5T-2/TEL	6625016	Connection cable, female M12, straight, 5-pin, cable length: 2 m, sheath material: PVC, black; cULus approval; other cable lengths and qualities available, see www.turck.com	
WKC4.5T-2/TEL	6625028	Connection cable, female M12, angled, 5-pin, cable length: 2 m, sheath material: PVC, black; cULus approval; other cable lengths and qualities available, see www.turck.com	

Function accessories

Type code	Ident no.	Description	
TX1-Q20L60	6967114	Teach adapter for inductive encoders, linear position, angle, ultrasonic and capacitive sensors	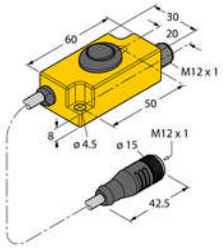

Edition • 2018-05-20T15:06:25+02:00

 Hans Turck GmbH & Co.KG ● D-45472 Mülheim an der Ruhr ● Witzlebenstraße 7 ● Tel. 0208 4952-0 ● Fax 0208 4952-264 ● more@turck.com ● www.turck.com