M12 Bu. D-cod. / RJ45 Ethernet adapter 0° 4-pol.

Ethernet CAT5
Control cabinet entry system
Female straight – female straight
M12 – RJ45, 4-pole
D-coded
shielded

Plastic housings with good resistance against chemicals and oils. The resistance to aggressive media should be individually tested for your application. Further details on request.

Link to Product

Illustration

The information in this brochure has been compiled with the utmost care.
Liability for the correctness completeness and topicality of the information is restricted to gross negligence. Version: 01/20

stay connected



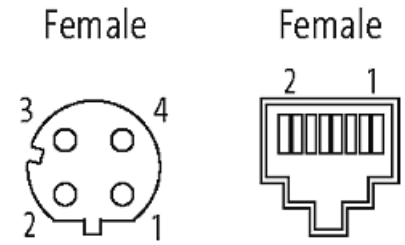

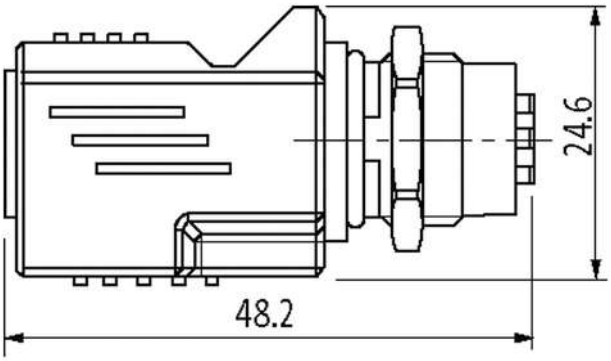

Depth: 23 mm

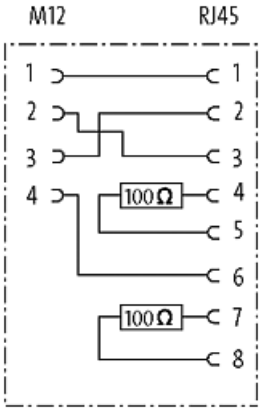

Product may differ from Image

More Info

EtherNet/IP

Form

The information in this brochure has been compiled with the utmost care.
Liability for the correctness completeness and topicality of the information is restricted to gross negligence. Version: 01/20

Form	44671
Technical Data	
Operating voltage	max. 60 V DC
Operating current per contact	max. 1.76 A
Transfer parameters	CAT5, Class D (ISO/IEC 11801:2002), (EN 50173-1)
Transfer rate	up to 100 Mbit/s full duplex
Coding	M12, D-coded
Protection	IP68 (M12) - IP20 (RJ45)
Locking material	Brass, chrome plated
Material	PUR
General data	
Temperature range	-25...+85 °C
Commercial data	
country of origin	CZ
customs tariff number	85366990
EAN	4048879566896
eClass	27143423
Packaging unit	1

The information in this brochure has been compiled with the utmost care.
Liability for the correctness completeness and topicality of the information is restricted to gross negligence. Version: 01/20